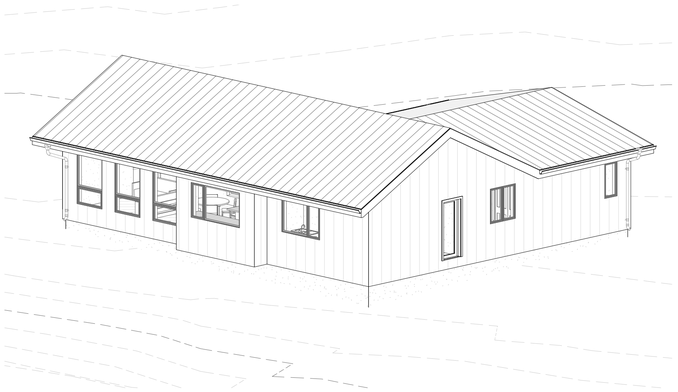

1 ISOMETRIC - NORTH
SCALE:

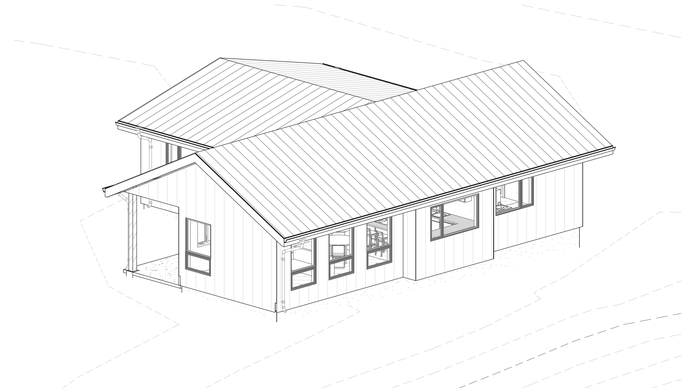

2 I OMETRIC - EAST
SCALE:

3 ISOMETRIC - SOUTH
SCALE:

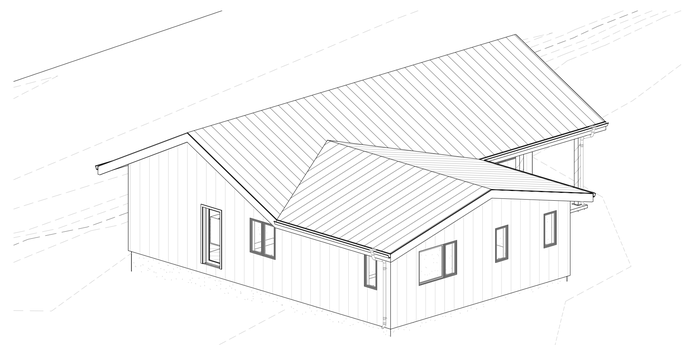

4 I OMETRIC - WEST
SCALE:

BIG SPRINGS TROUT H TCHERY RE IDENCE #2035 REPLACEMENT

SHEET INDEX

HEET NUMBER	SHEET NAME
GENERAL HEETS	
G000	PROJECT COVER
G002	GENERAL NOTES
RCHITECTURAL SHEETS	
A00	SITE PLAN
A100	CRAWLSPACE FLOOR PLAN
A10	FIRST FLOOR PLAN
A102	ENLARGED FLOOR PLAN
A200	REF. CEILING PLAN
A300	ROOF PLAN
A400	EXT. ELEVATIONS
A40	EXT. ELEVATIONS
A600	SECTIONS
A60	SECTIONS
A602	WALL SECTIONS
A700	DETAILS
A800	DOOR SCHEDULES
A80	WINDOW SCHEDULE
TRUCTUR L SHEETS	
S1.0	GENERAL STRUCTURAL NOTES
S1.	GENERAL STRUCTURAL NOTES
S1.2	TYPICAL DETAILS
S1.3	TYPICAL DETAILS
S1.4	TYPICAL DETAILS
S1.5	TYPICAL DETAILS
CIVIL HEETS	
C1.0	CIVIL COVER SHEET
C1.	GENERAL NOTES LEGENDS
C2.0	VICINITY PLAN
C2.	DRAINFIELD LAYOUT PLAN
C3.0	DETAILS

DE UCT ALTERNATE #1:
REMOVE CONCRETE SIDEWALKS, AND GRAVEL DRIVEWAY FROM THE BASE BID AND LEAVE THE GROUND IN ITS NATURAL STATE, MAKING SURE THERE IS POSITIVE DRAINAGE AWAY FROM THE RESIDENCE.

DE UCT ALTERNATE #2:
REMOVE METAL ROOFING FROM BASE BID AND REPLACE FINISHED ROOFING MATERIAL WITH 30-YEAR DIMENSIONAL ARCHITECTURAL ASPHALT SHINGLES. ALL ROOFING SYSTEM MATERIALS ARE TO BE THE SAME AS THE BASE BID INCLUDING SYNTHETIC UNDERLAYMENT, AND PRE-FINISHED FLASHING AROUND THE PERIMETER OF THE ROOF. FOLLOWING THE ASPHALT SHINGLE MANUFACTURER'S REQUIREMENTS FOR INSTALLATION. COLOR IS TO BE SELECTED BY OWNER FROM MANUFACTURER'S STANDARD COLORS.

VICINITY AERIAL

PR JECT DIRECTORY

CLIENT REPRESENTATIVE
Joey Renenger
Project Manager
Design and Construction
Montana Fish, Wildlife & Parks
P.O. Box 200701
Helena, MT 59620-0701
406.841.4007
Joey.Renenger@mt.gov

RCHITECT
Spark Architecture
Sophia Sparklin
410 Central Ave #506
Great Falls, MT 59401
406.453.0001
sophia@spark-architecture.com

GE TECHNICAL
TD&H Engineering
Craig Nadeau
1800 River Drive N.
Great Falls, MT 59401
406.761.3010
craig.nadeau@tdhengineering.com

TRUCTURAL ENGINEER
TD&H Engineering
Rodney Blake, PE
1800 River Drive N.
Great Falls, MT 59401
406.761.3010
rodney.blake@tdhengineering.com

C E ESIGN CRITERIA

PPLIC BLE C ES:

1. International Residential Code, (20)
2. International Energy Conservation Code, (2012) Editions: ARM 24.301.161
3. ICC A117.1 – Accessibility, 2009 Edition
4. National Electrical Code, 2017 Edition (NFPA 70)
   As amended by the State of Montana: ARM 24.301.401
5. Uniform Plumbing Code, (2018), together with the following:
   UPC Appendix Chapters, Appendix A, Appendix B, and Appendix D The UPC, as modified and amended by the State of Montana: ARM 24.301.301, ARM 24.301.351
6. International Mechanical Code, (2018)
7. International Fire Code, (2012)

PR JECT DATA

PROJECT NAME:	BIG SPRINGS TROUT HATCHERY RESIDENCE #2035 REPLACEMENT
PROJECT DESCRIPTION:	NEW RESIDENTIAL
PROJECT ADDRESS:	2013 FISH HATCHERY RD, LEWISTOWN, MT 59457
CLIMATE ZONE:	6B
FIRE SUPPRESSION:	NONE
CONDITIONED AREA:	1,378 SF
MAX BLDG HEIGHT (ACTUAL):	16'-6" , 1 STORY
AREA OF LOT (NET):	
EXTERIOR WALLS:	WOOD FRAME, CONTINUOUS INSULATION

ENERGY CO E C MPLIANCE

ELEMENT	INSULATION / VALUE
CEILING	R-49
BA EMENT WALL	R- 5ci OR R-19 cavity
WALLS - W OD FR ME	R-20+5ci OR R-13+ 0ci *R-21 OR 13+10ci
FL OR	R-30
SL B-ON-GRADE	R- 0ci for 4 " below surface
FENESTRATION	U-0.32
***ALL REQUIRED INSULATION V LUE BA ED N IECC**	

*VALUES AMMENDED BY STATE OF MONTANA

Spark
ARCHITECTURE
4 0 Central Ave
GREAT FALLS, MT 59401
T: 406 453.0001
F: 406 760.1788
SPARK-ARCHITECTURE.COM

LICENSED ARCHITECT
SOPHIA A. SPARKLIN
GREAT FALLS, MT
STATE OF MONTANA

FWP BIG PRINGS RE I ENCE

20 3 Fish Hatchery Rd, Lewistown, MT 59457

PH E	REVISIONS
Re-bid	January 10, 2022

20011

PROJECT COVER

G000

/ 0/2022 3:07:34 AM

GENERAL NOTES

1. ALL MANUFACTURED ARTICLES, MATERIALS AND EQUIPMENT SHALL BE APPLIED INSTALLED, CONNECTED, ERECTED, USED, CLEANED, AND CONDITIONED ACCORDANCE WITH THE MANUFACTURER'S WRITTEN SPECIFICATIONS OR INSTRUCTIONS UNLESS HEREINAFTER SPECIFIED TO THE CONTRARY.

2. ALL PRODUCTS LISTED BY ICBO / NER NUMBER SHALL BE INSTALLED PER THE REPORT AND MANUFACTURER'S WRITTEN INSTRUCTIONS. PRODUCT SUBSTITUTIONS FOR LISTED PRODUCTS SHALL ALSO HAVE ICB APPROVED EVALUATION REPORTS OR BE APPROVED AND LISTED BY OTHER NATIONALLY RECOGNIZED TESTING AGENCIES.

3. ITEMS NOT LOCATED BY DIMENSION (DOORS, ETC.) MAY BE MOVED SLIGHTLY TO ACCOMMODATE CONSTRUCTION.

4. THE CONTRACTOR SHALL VERIFY THE LOCATION OF EXISTING UTILITIES AND PROTECT THE SAME.

5. CONTRACTORS AND SUBCONTRACTORS ARE TO VERIFY ALL DIMENSIONS, GRADE ELEVATIONS, UTILITY LOCATIONS AND RELATED INFORMATION. ALL WORK IS TO BE IN COMPLIANCE WITH THE STATE / CITY AND FEDERAL REQUIREMENTS AS WELL AS THE PLANS AND SPECIFICATIONS.

6. BEFORE ANY CONCRETE OR PLUMBING MATERIALS ARE INSTALLED, THE NATIVE OR FILL MATERIAL FOR GRADING SHALL BE TESTED TO DETERMINE IF THERE ARE ANY CORROSIVE PROPERTIES THAT COULD BE HARMFUL TO THOSE MATERIALS.

7. FINISHED FLOOR ELEVATIONS (AS-BUILT) SHALL BE CERTIFIED TO THE CITY FOR THE FEDERAL EMERGENCY MANAGEMENT ASSOCIATION (F.E.M.A.) WHERE REQUIRED.

8. THE CONTRACTOR IS RESPONSIBLE FOR VERIFYING ALL CONDITIONS, DIMENSIONS AND MATERIAL IN THE FIELD FOR ACCURACY PRIOR TO CONSTRUCTION. IF THERE ARE ANY QUESTIONS REGARDING THESE OR OTHER COORDINATION ISSUES THE CONTRACTOR SHALL SUBMIT THEM IN WRITING TO THE ARCHITECT BEFOR PROCEEDING WITH THE WORK IN QUESTION, OR RELATED WORK. CLARIFY ALL DISCREPANCIES RELATIVE TO CONSTRUCTION DOCUMENTS, SPECIFICATIONS AND FIELDCONDITIONS PRIOR TO SUBMITTING BIDS AND COMMENCING WORK.

9. DO NOT SCALE DRAWINGS. DIMENSIONS SHALL GOVERN UNLESS OTHERWISE NOTED.

10. THE INTENT OF THE CONSTRUCTION DOCUMENTS IS TO ALLOW FOR THE PERFORMANCE OF THE WORK. EVERY ITEM NECESSARILY REQUIRED MAY NOT BE SPECIFICALLY MENTIONED OR SHOWN.

11. IT IS INTENDED THAT THE CONTRACTOR PROVIDE A COMPLETE JOB AND ANY OMISSIONS IN THESE OR IN THE OUTLINE OF WORK SHALL NOT BE CONSTRUED AS RELIEVING THE CONTRACTOR FROM THE RESPONSIBILITIES IMPLIED BY THE SCOPE OF WORK EXCEPT AS NOTED.

12. PROVIDE STRICT CONTROL OF JOB CLEANING AND PREVENT DUST AND DEBRIS FROM EMANATING FROM THE CONSTRUCTION AREA.

13. THE GENERAL CONTRACTOR IS RESPONSIBLE FOR COORDINATION OF WORK BETWEEN ALL TRADES.

14. ALL WORK PERFORMED SHALL COMPLY WIT HALL NOTES IN THE DRAWINGS AND SPECIFICATIONS. THE CONTRACTOR SHALL BE RESPONSIBLE TO COORDINATE THE INTENT OF ALL NOTES IN WITH THE DRAWINGS, SPECIFICATIONS AND OTHER PROJECT DOCUMENTS, INCLUDING STRUCTURAL, CIVIL MECHANICAL ELECTRICAL PLUMING AND OTHER TRADES INDICATED IN CONTRACT DOCUMENTS.

15. THE CONTRACTOR SHALL CAREFULLY STUDY THE CONTRACT DOCUMENTS PRIOR TO CONSTRUCTION, AND SHALL REPORT TO THE ARCHITECT WITHOUT DELAY ANY ERRORS INCONSISTENCIES, OR OMISSIONS HE/SHE MAY DISCOVER AND SHALL NOT PROCEED WITH THE WORK UNTIL THE INTENT OF THE DOCUMENTS IS CONFIRMED BY THE ARCHITECT.

16. ALL WORK SHALL CONFIRM TO THE REQUIREMENTS OF:
    A) REFER TO CODE PLANS FOR BUILDING CODE REQUIREMENTS.
    B) U.S. DEPARTMENT OF LABOR OCCUPATIONAL SAFETY AND HEALTH ADMINISTRATION (OSHA).
    C) AMERICANS WITH DISABILITIES ACT.
    D) OTHER REGULATIONS AS SET FORTH IN THE DRAWINGS AND SPECIFICATIONS.
    E) ALL OTHER APPLICABLE CODES AND ALL OTHER GOVERNING AUTHORITIES HAVING JURISDICTION OVER THE PROJECT.

17. ALL WORK SHALL BE AT THE MINIMUM THE BEST PRACTICES OF EACH TRADE.

18. PROVIDE EXITING AND STAIRWAY GRAPHICS AS REQUIRED BY CODES ORDINANCES RULES AND REGULATIONS OR JURISDICTION MATERIALS TYPE AND COLOR SHALL BE AS SHOWN IN THE DRAWINGS OR SS SELECTED BY THE ARCHITECT.

SYMBOLS

0	GRID
℄	CENTER LINE
Room name 101 150 SF	ROOM TAG / NUMBER
e1 i1	WALL TAG - EXT. AND INT.
1	WINDOW TAG
101	DOOR TAG
+ 0'-0"	CEILING HEIGHT
Name Elevation	DATUM
SIM X A-101	CALLOUT HEAD
N	NORTH ARROW
ENTRY	DOOR ENTRY

ABBREVIATIONS

ABC	AGGREGATE BASE COURSE
ABV.	ABOVE
ADJ.	ADJUSTABLE
APPROX.	APPROXIMATE
BD.	BOARD
BLDG.	BUILDING
B.O.	BOTTOM OF
CAB.	CABINET
C.I.	CAST IRON
C.I.P.	CAST IN PLACE
CLG.	CEILING
CLKG.	CAULKING
CLO.	CLOSET
CLR	CLEAR
COL.	COLUMN
CONC.	CONCRETE
CONT.	CONTINUOUS
CTR.	CENTER
DTL.	DETAIL
DIA.	DIAMETER
DN	DOWN
DR	DOOR
DWR	DRAWER
DWG	DRAWING
EA.	EACH
ELEC.	ELECTRICAL
EQ	EQUAL
EQUIP.	EQUIPMENT
EXT.	EXTERIOR
F.F.E.	FINISH FLOOR ELEVATION
FIN.	FINISH
F.O.	FACE OF
GA.	GUAGE
GALV	GALVANIZED
GYP	GYPSUM
GWB	GYPSUM WALL BOARD
H.B.	HOSE BIBB
HDWD	HARDWOOD
HORIZ	HORIZONTAL
HT	HEIGHT
HB	HOSE BIB
I.D.	INSIDE DIAMETER
INSUL	INSULATION
INT.	INTERIOR
JT.	JOINT
KIT.	KITCHEN
LAV.	LAVATORY
LT.	LIGHT
MAX.	MAXIMUM
MECH.	MECHANICAL
MTL	METAL
MFR.	MANUFACTURER
MIN	MINIMUM
MISC.	MISCELANEOUS
MTD.	MOUNTED
N.I.C.	NOT IN CONTRACT
NO.	NUMBER
N.T.S.	NOT TO SCALE
O.C.	ON CENTER
O.D.	OUTSIDE DIAMETER
OPNG.	OPENING
OPP.	OPPOSITE
PL.	PLATE
PLY	PLYWOOD
REFRIG	REFRIGERATOR
REINF.	REINFORCED
REQ.	REQUIRED
RM.	ROOM
R.O.	ROUGH OPENING
SCHED.	SCHEDULED
SEC.	SECTION
SIM.	SIMILAR
SPEC.	SPECIFACTION
SQ.	SQUARE
STD.	STANDARD
STOR.	STORAGE
SUSP.	SUSPENDED
SYM.	SYMMETRICAL
T.O.	TOP OF
TYP.	TYPICAL
U.N.O.	UNLESS NOTED OTHERWISE
VERT.	VERTICAL
W/	WITH
W.C.	WATER CLOSET
W/O	WITHOUT
WP.	WATERPROOF

WILDFIRE RESISTANCE NOTES

ROOF DESIGN
THE ROOF—WITH A LARGE SURFACE AREA AND POTENTIAL FOR ACCUMULATION OF COMBUSTIBLE VEGETATIVE DEBRIS—IS ONE OF THE MOST VULNERABLE PARTS OF A HOME. KEY MITIGATIONS FOR THE ROOF INCLUDE:

1. INSTALL A CLASS A FIRE-RATED COVERING OR ASSEMBLY.
2. WHERE APPLICABLE, INSTALL BIRD STOPS AT ROOF EDGE, INCLUDING ANY RIDGES. AN ADDITIONAL LAYER OF PROTECTION CAN BE ATTAINED IF A LAYER OF ROLL ROOFING IS INSTALLED OVER THE SURFACE OF THE ROOF DECK.
3. FOR COMPLEX ROOF DESIGNS WHERE THERE ARE JUNCTIONS BETWEEN A ROOF AND A WALL (E.G., DORMERS), CONSIDER NONCOMBUSTIBLE SIDING.
4. THE UNDER-EAVE AREA SHOULD BE CONSTRUCTED USING A SOFFITED EAVE DESIGN.
5. BOTH INLET (UNDER-EAVE) AND OUTLET (ROOF OR GABLE) VENTS CAN BE VULNERABLE TO EMBER ENTRY.
   - VENTS SHOULD BE COVERED WITH 1/8- TO 1/16-INCH NONCOMBUSTIBLE AND CORROSION-RESISTANT SCREENING. VENTS COVERED WITH 1/16-INCH SCREENING SHOULD BE CLEANED REGULARLY SO THAT THEY CAN PERFORM THEIR MOISTURE MANAGEMENT FUNCTION.
   - RIDGE OR OFF-RIDGE VENTS ARE LESS VULNERABLE THAN GABLE END VENTS.
   - USE OF VENTS APPROVED BY THE CALIFORNIA OFFICE OF THE STATE FIRE MARSHAL BUILDING MATERIALS LISTING PROGRAM, WHICH HAVE DEMONSTRATED A RESISTANCE TO EMBER AND FLAME EXPOSURES.1

EXTERIOR WALLS
EXTERIOR WALLS AND WINDOWS ARE ESPECIALLY VULNERABLE WHEN EXPOSED TO FLAMES OR RADIANT HEAT FOR EXTENDED PERIODS, SUCH AS FROM VEGETATION OR NEIGHBORING HOMES THAT HAVE IGNITED. DOORS AND WINDOWS CAN ALSO BE VULNERABLE TO WIND-BLOWN EMBERS AND FLAMES. IF THERE IS A HOME OR NEIGHBORING BUILDING WITHIN 30 FEET, THE POTENTIAL FOR RADIANT HEAT FROM THAT STRUCTURE—SHOULD IT IGNITE—MAY BE ENOUGH TO IGNITE SIDING OR BREAK GLASS IN WINDOWS, SO ADDITIONAL MITIGATIONS MAY BE NECESSARY. KEY MITIGATIONS FOR EXTERIOR WALLS INCLUDE:

1. MAKE SURE THERE IS, AT A MINIMUM, A 6-INCH NONCOMBUSTIBLE ZONE AT THE BASE OF THE WALL (I.E., BETWEEN THE GROUND AND START OF SIDING).
2. INSTALL MULTI-PANE WINDOWS HAVING TEMPERED GLASS.
3. WHEN VINYL WINDOWS ARE USED, MAKE SURE SINGLE- AND DOUBLE-HUNG WINDOWS INCLUDE METAL REINFORCEMENT IN INTERLOCK MEMBERS.
4. IF THERE IS A HOME OR NEIGHBORING BUILDING WITHIN 30 FEET, USE IGNITION-RESISTANT OR NONCOMBUSTIBLE SIDING AND METAL SHUTTERS.

LANDSCAPING AND NEAR HOME IGNITION ZONE
MANAGING VEGETATION AND OTHER COMBUSTIBLE ITEMS ON THE PROPERTY IS IMPORTANT FOR REDUCING THE ENERGY AND POTENTIAL SPREAD OF FIRE. REGARDLESS OF VEGETATION MAINTENANCE AND DEFENSIBLE SPACE ON THE LARGER PROPERTY, COMBUSTIBLE VEGETATION AND MULCH IN THE NEAR-HOME, 5-FOOT AREA IMMEDIATELY AROUND THE HOME CAN IGNITE AND ALLOW FLAMES TO TOUCH THE HOME. KEY MITIGATIONS FOR LANDSCAPING INCLUDE:

1. FOLLOW READILY AVAILABLE GUIDANCE ON CREATING AN EFFECTIVE DEFENSIBLE SPACE ON YOUR PROPERTY IN A RADIUS OF AT LEAST 100 FEET FROM THE HOME (OR TO THE PROPERTY LINE).
2. CREATE A NEAR-HOME NONCOMBUSTIBLE ZONE WITHIN 5 FEET OF THE HOME AND UNDER THE ENTIRE FOOT PRINT OF ANY ATTACHED DECK.
3. A NONCOMBUSTIBLE FENCE SECTION SHOULD BE USED FOR 5 TO 8 FEET WHERE THE FENCE CONNECTS TO THE HOME.

LINETYPES

- BOUNDARY OF WORK
- CENTER LINE
- DEMOLITION
- HIDDEN FEATURES
- OVERHEAD
- PROPERTY

MATERIAL LEGEND

- METAL STANDING SEAM ROOFING
- METAL BOARD AND BATT SIDING
- GYPSUM BOARD
- EARTH
- GRAVEL

CODE INFORMATION

EGRESS WINDOWS

R303.1 HABITABLE ROOMS
HABITABLE ROOMS SHALL HAVE AN AGGREGATE GLAZING AREA OF NOT LESS THAN 8% OF THE FLOOR AREA OF SUCH ROOM.

R310 EMERGENCY ESCAPE AND RESCUE OPENINGS
R310.1 BASEMENTS, HABITABLE ATTICS AND EVERY SLEEPING ROOM SHALL HAVE NOT LESS THAN ONE OPERABLE EMERGENCY ESCAPE AND RESCUE OPENING.
EXCEPTION: BASEMENTS USED ONLY TO HOUSE MECHANICAL EQUIPMENT NOT EXCEEDING A TOTAL FLOOR AREA OF 200 SF DOES NOT NEED AN EMERGENCY ESCAPE.
R310.2 WINDOW WELLS
THE MINIMUM HORIZONTAL AREA OF THE WINDOW WELL SHALL BE 9 SQUARE FEET (0.9 M2), WITH A MINIMUM HORIZONTAL PROJECTION AND WIDTH OF 36 INCHES. THE AREA OF THE WINDOW WELL SHALL ALLOW THE EMERGENCY ESCAPE AND RESCUE OPENING TO BE FULLY OPENED.
EXCEPTION: THE LADDER OR STEPS REQUIRED BY SECTION
R310.2.1 SHALL BE PERMITTED TO ENCROACH A MAXIMUM OF 6 INCHES INTO THE REQUIRED DIMENSIONS OF THE WINDOW WELL.
R310.2.2 WINDOW SILL HEIGHT
WHERE A WINDOW IS PROVIDED AS THE EMERGENCY ESCAPE AND RESCUE OPENING, IT SHALL HAVE A SILL HEIGHT OF NOT MORE THAN 44" ABOVE THE FLOOR; WHERE THE SILL HEIGHT IS BELOW GRADE IT SHALL BE PROVIDED WITH A WINDOW WELL.
R310.2.3 WINDOW WELLS.
THE HORIZONTAL AREA OF THE WINDOW WELL SHALL BE NOT LESS THAN 9 SF WITH A HORIZONTAL PROJECTION AND WIDTH OF NOT LESS THAN 36"
R310.2.3.1 LADDER AND STEPS
WINDOW WELLS WITH A VERTICAL DEPTH GREATER THAN 44" SHALL BE EQUIPPED WITH A PERMANENTLY AFFIXED LADDER OR STEPS USABLE WITH THE WINDOW IN THE FULLY OPEN POSITION.

STAIRWAYS

R311.7 STAIRWAYS
R311.7.1 WIDTH
STAIRWAYS SHALL BE NOT LESS THAN 36" IN CLEAR WIDTH AT ALL POINTS ABOVETHE PERMITTED HANDRAIL HEIGHT AND BELOW THE REQUIRED HEADROOM HEIGHT. THE CLEAR WIDTH OF STAIRWAYS AT OR BELOW THE HANDRAIL HEIGHT SHALL NOT BE LESS THAN 31 1/2" WHERE A HANDRAIL IS INSTALLED ON ONE SIDE.
R311.7.5 STAIR TREADS AND RISERS (MONTANA AMENDMENT)
DIMENSIONS AND DIMENSIONED SURFACES SHALL BE EXCLUSIVE OF CARPETS, RUGS AND RUNNERS.
R311.7.5.1 RISERS - THE MAXIMUM RISER HEIGHT SHALL BE 8 1/4 INCHES. THE RISER SHALL BE MEASURED VERTICALLY BETWEEN LEADING EDGES OF THE ADJACENT TREADS. THE GREATEST RISER HEIGHT WITHIN ANY FLIGHT OF STAIRS SHALL NOT EXCEED THE SMALLEST BY MORE THAN 3/8 INCH. RISERS SHALL BE VERTICAL OR SLOPED FROM THE UNDERSIDE OF THE NOSING OF THE TREAD ABOVE AT AN ANGLE NOT MORE THAN 30 DEGREES FROM THE VERTICAL. OPEN RISERS ARE PERMITTED PROVIDED THAT THE OPENING BETWEEN TREADS DOES NOT PERMIT THE PASSAGE OF A 4-INCH-DIAMETER SPHERE.
R311.7.5.2 TREADS - THE MINIMUM TREAD DEPTH SHALL BE 9 INCHES. THE TREAD DEPTH SHALL BE MEASURED HORIZONTALLY BETWEEN THE VERTICAL PLANES OF THE FOREMOST PROJECTION OF ADJACENT TREADS AND AT A RIGHT ANGLE TO THE TREAD'S LEADING EDGE. THE GREATEST TREAD DEPTH WITHIN ANY FLIGHT OF STAIRS SHALL NOT EXCEED THE SMALLEST BY MORE THAN 3/8 INCH.
R311.7.5.3 NOSINGS
THE RADIUS OF CURVATURE AT THE NOSING SHALL BE NO GREATER THAN 9/16 INCH (14 MM). A NOSING NOT LESS THAN 3/4 INCH (19 MM) BUT NOT MORE THAN 1 1/4 INCHES (32 MM) SHALL BE PROVIDED ON STAIRWAYS WITH SOLID RISERS. THE GREATEST NOSING PROJECTION SHALL NOT EXCEED THE SMALLEST NOSING PROJECTION BY MORE THAN 3/8 INCH (9.5 MM) BETWEEN TWO STORIES, INCLUDING THE NOSING AT THE LEVEL OF FLOORS AND LANDINGS. BEVELING OF NOSINGS SHALL NOT EXCEED 1/2 INCH.
R311.7.6 LANDINGS FOR STAIRWAYS
THERE SHALL BE A FLOOR OR LANDING AT THE TOP AND BOTTOM OF EACH STAIRWAY. THE MINIMUM WIDTH PERPENDICULAR TO THE DIRECTION OF TRAVEL SHALL BE NO LESS THAN THE WIDTH OF THE FLIGHT SERVED. LANDINGS OF SHAPES OTHER THAN SQUARE OR RECTANGULAR SHALL BE PERMITTED PROVIDED THE DEPTH AT THE WALK LINE AND THE TOTAL AREA IS NOT LESS THAN THAT OF A QUARTER CIRCLE WITH A RADIUS EQUAL TO THE REQUIRED LANDING WIDTH. WHERE THE STAIRWAY HAS A STRAIGHT RUN, THE MINIMUM DEPTH IN THE DIRECTION OF TRAVEL SHALL BE NOT LESS THAN 36 INCHES.
EXCEPTION: A FLOOR OR LANDING IS NOT REQUIRED AT THE TOP OF AN INTERIOR FLIGHT OF STAIRS, INCLUDING STAIRS IN AN ENCLOSED GARAGE, PROVIDED A DOOR DOES NOT SWING OVER THE STAIRS.
R311.7.7 STAIRWAY WALKING SURFACE
THE WALKING SURFACE OF TREADS AND LANDINGS OF STAIRWAYS SHALL BE SLOPED NO STEEPER THAN ONE UNIT VERTICAL IN 48 INCHES HORIZONTAL (2-PERCENT SLOPE).
R311.7.8.2 CONTINUITY
HANDRAILS FOR STAIRWAYS SHALL BE CONTINUOUS FOR THE FULL LENGTH OF THE FLIGHT, FROM A POINT DIRECTLY ABOVE THE TOP RISER OF THE FLIGHT TO A POINT DIRECTLY ABOVE THE LOWEST RISER OF THE FLIGHT. HANDRAIL ENDS SHALL BE RETURNED OR SHALL TERMINATE IN NEWEL POSTS OR SAFETY TERMINALS. HANDRAILS ADJACENT TO A WALL SHALL HAVE A SPACE OF NOT LESS THAN 1 1/2 INCH BETWEEN THE WALL AND THE HANDRAILS.
EXCEPTIONS:
1. HANDRAILS SHALL BE PERMITTED TO BE INTERRUPTED BY A NEWEL POST AT THE TURN.

SMOKE ALARMS

R314 SMOKE ALARMS
R314.3 LOCATION
SMOKE ALARMS SHALL BE INSTALLED IN THE FOLLOWING LOCATIONS.
1. IN EACH SLEEPING ROOMS
2. OUTSIDE THE SLEEPING AREA IN THE IMMEDIATE VICINITY OF THE BEDROOMS.
3. ON EACH ADDITIONAL STORY, BASEMENT, FIRST FLOOR AND HABITABLE ATTIC AREA.
4. NOT LESS THAN 3'-0" HORIZONTALLY FROM A DOOR OF A BATHROOM.

Spark ARCHITECTURE
410 Central Ave
GREAT FALLS, MT 59401
T: 406.453.0001
F: 406.760.1788
SPARK-ARCHITECTURE.COM

LICENSED ARCHITECT
SOPHIA A. SPARKLING
LICENSE
GREAT FALLS, MT
STATE OF MONTANA

FWP BIG SPRINGS RESIDENCE

2013 Fish Hatchery Rd, Lewistown, MT 59457

PHASE	REVISIONS
Re-bid	January 10, 2022

20011

GENERAL NOTES

G002

1/10/2022 3:07:35 AM

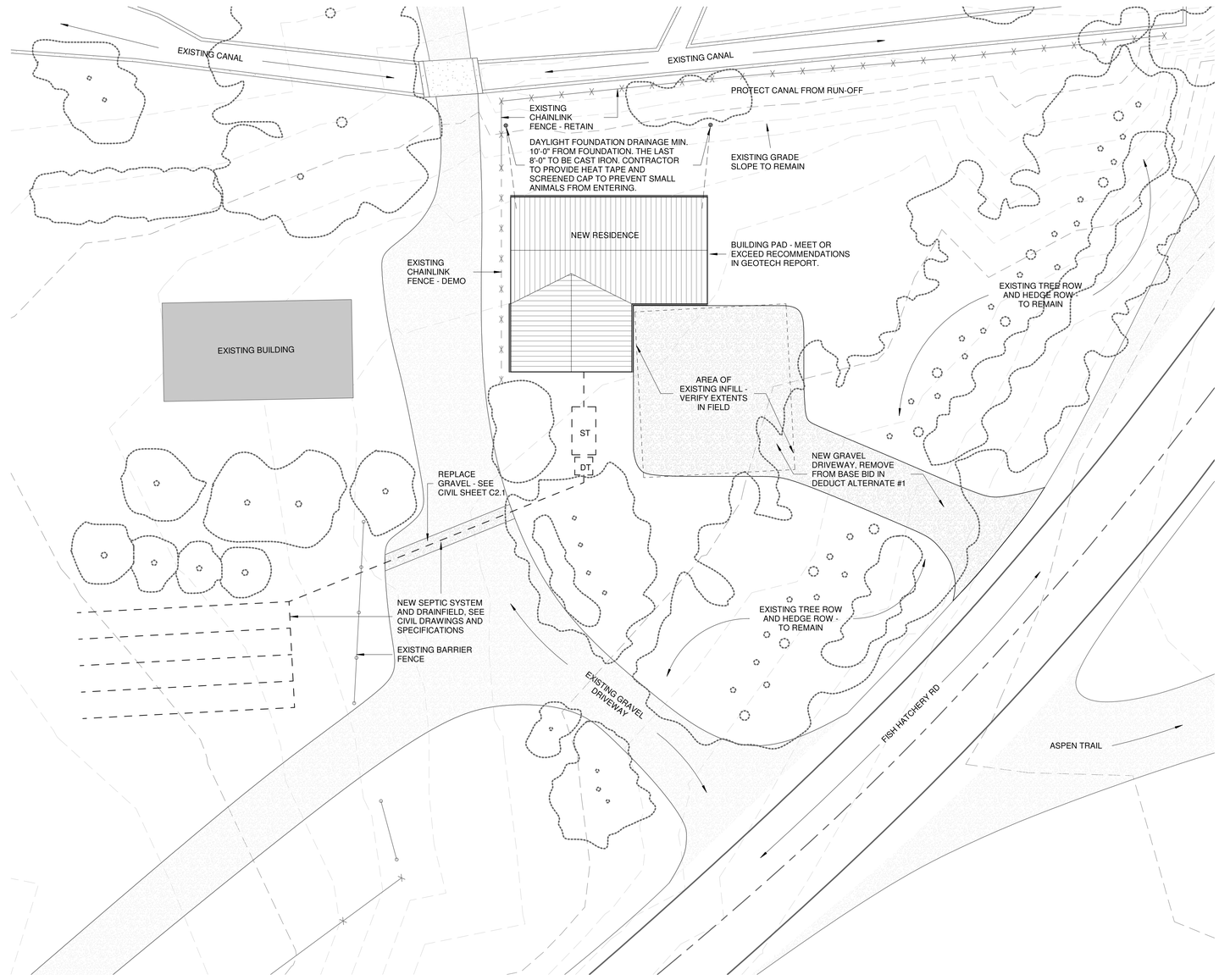

1 SITE PLAN
SCALE: 1/16" = 1'-0"

Spark
ARCHITECTURE

410 Central Ave
GREAT FALLS, MT 59401
T: 406.453.0001
F: 406.760.1788
SPARK-ARCHITECTURE.COM

LICENSED ARCHITECT
SOPHIA A. SPARKMAN
GREAT FALLS, MT
STATE OF MONTANA

FWP BIG SPRINGS RESIDENCE

2013 Fish Hatchery Rd, Lewistown, MT 59457

PHASE	REVISIONS
Re-bid	January 10, 2022

20011

SITE PLAN

A001

1/10/2022 3:07:16 AM

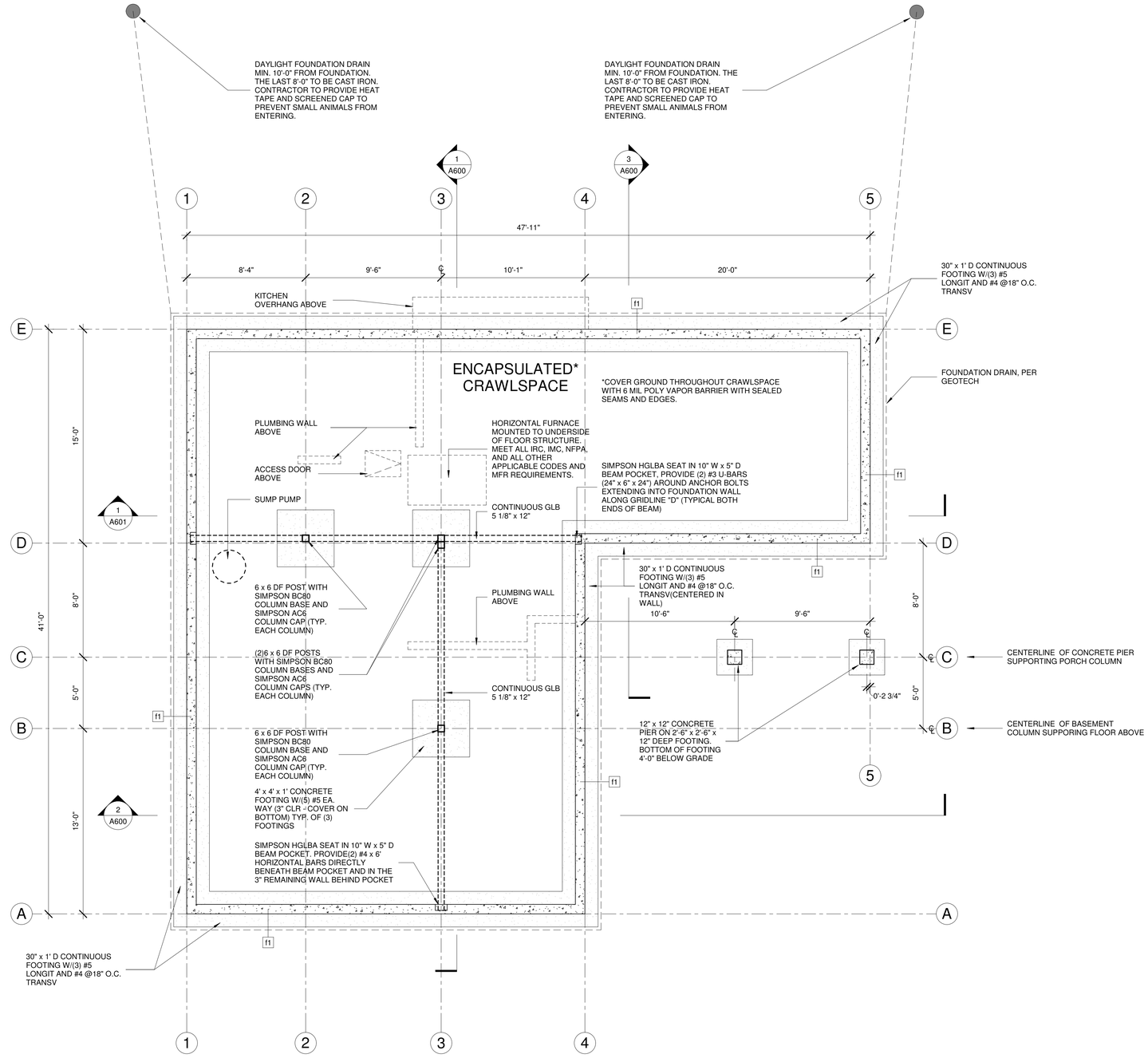

1 CRAWLSPACE FLOOR PLAN

SCALE: 1/4" = 1'-0"

GENERAL NOTE: MECHANICALLY CONDITION CRAWL SPACE AS REQUIRED TO MEET CURRENT IBC MECHANICAL CODE REQUIREMENTS.

Spark ARCHITECTURE

410 Central Ave
GREAT FALLS, MT 59401
T: 406.453.0001
F: 406.760.1788
SPARK-ARCHITECTURE.COM

LICENSED ARCHITECT
SOPHIA A. SPARK
GREAT FALLS, MT
STATE OF MONTANA

FWP BIG SPRINGS RESIDENCE

2013 Fish Hatchery Rd, Lewistown, MT 59457

PHASE	REVISIONS
Re-bid	January 10, 2022

20011

CRAWLSPACE FLOOR PLAN

A100

1/10/2022 3:07:17 AM

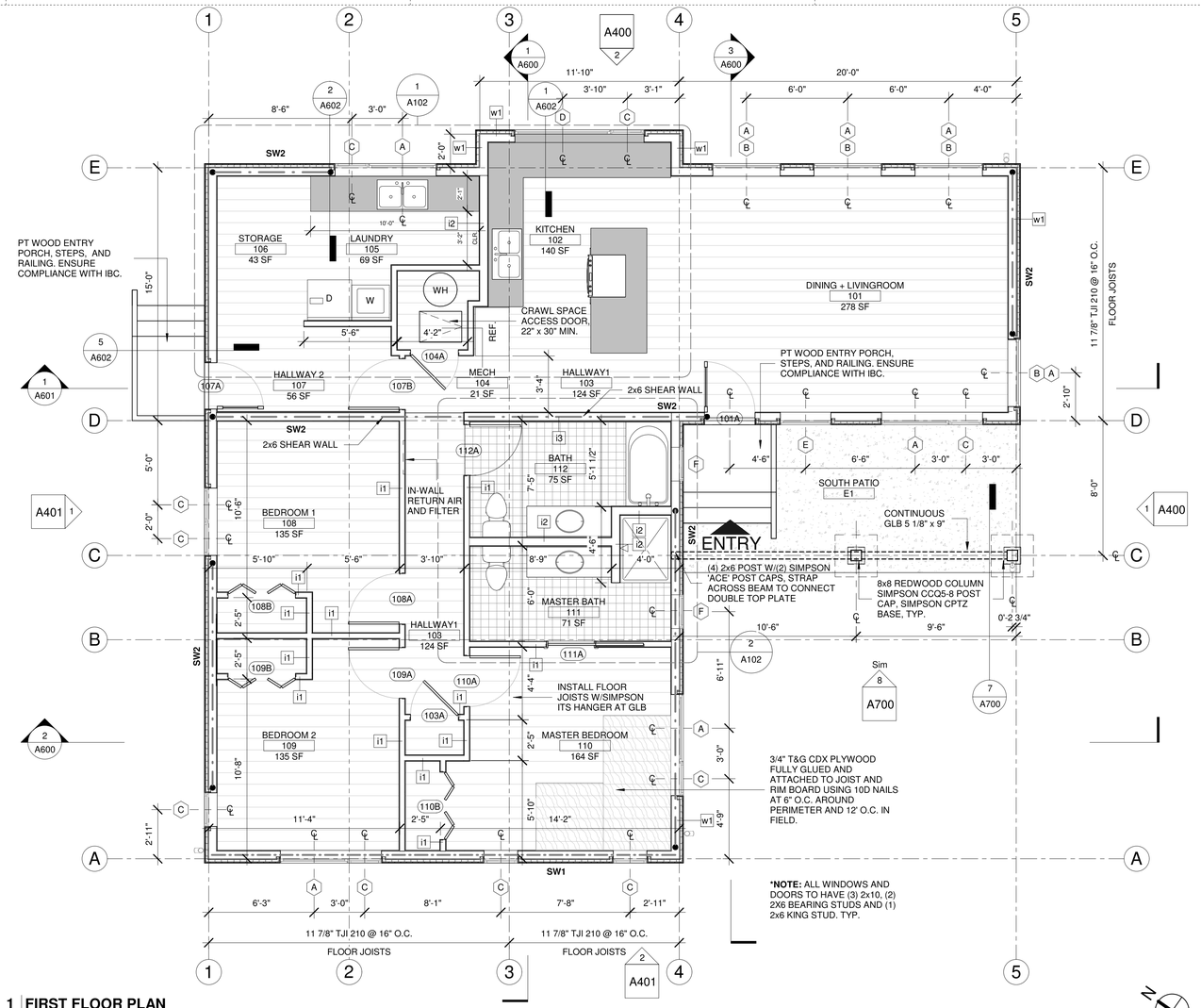

*NOTE: ALL WINDOWS AND DOORS TO HAVE (3) 2x10, (2) 2X6 BEARING STUDS AND (1) 2x6 KING STUD. TYP.

1 FIRST FLOOR PLAN

SCALE: 1/4" = 1'-0"

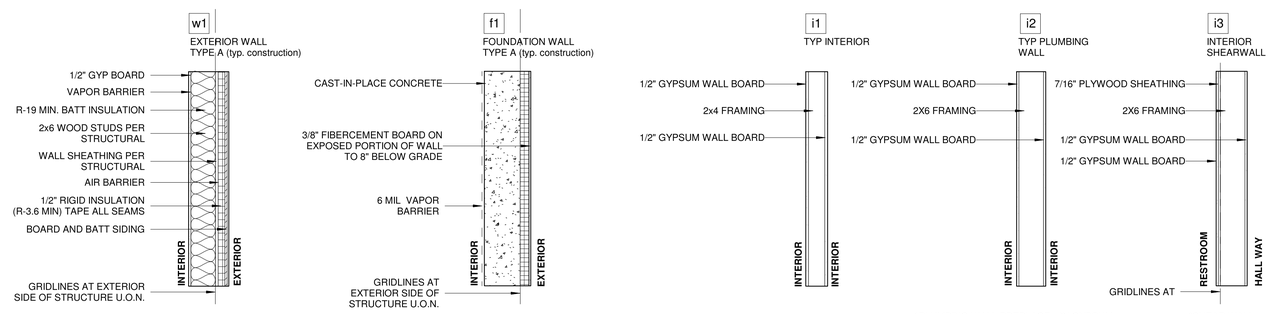

*TYPICAL FOUNDATION WALL BELOW GRADE PROVIDE 3/8" FIBERCEMENT BOARD AT EXPOSED WALL AND A MIN. 8" BELOW GRADE
*P.T. = PRESSURE TREATED

*PLUMBING WALL PREPLACE 1/2" GYPSUM WALL BOARD WITH PURPLE BOARD AT ALL WET LOCATIONS, BEHIND SINKS, AROUND BATHTUB AND IN SHOWER AREA EXTEND PURPLE BOARD MIN. 24" HORIZONTALLY EITHER SIDE FULL AND HEIGHT OF WALL

*SHEAR WALL

WALL TYPE LEGEND

SCALE: 3/4" = 1'-0"

GENERAL NOTES - PLAN

1. DO NOT SCALE THE DRAWINGS. WRITTEN DIMENSIONS ON THE DRAWINGS GOVERN, UNLESS SPECIFICALLY INDICATED OTHERWISE.

2. ALL DIMENSIONS ARE TO FACE OF STUD, UNLESS NOTED OTHERWISE. OFFSET STUDS WHERE REQUIRED TO MAINTAIN FINISH WALL SURFACES FLUSH. INTERIOR DIMENSIONS FROM AN EXISTING WALL TO REMAIN ARE FROM FINISH FACE OF WALL.

3. ALL DIMENSIONS SHALL BE VERIFIED IN FIELD BEFORE PROCEEDING WITH THE WORK.

4. THESE DRAWINGS INDICATE DETAILS OF GENERAL DESIGN INTENT AND GENERAL METHOD AND MANNER OF ACCOMPLISHING WORK. THE ARCHITECT MAY ISSUE CLARIFICATION DETAILS AND MINOR MODIFICATIONS MAY BE REQUIRED TO SUIT JOB DIMENSIONS OR CONDITIONS AND THESE ARE INCLUDED AS PART OF THE WORK AS IF DRAWN AND DETAILED HEREIN.

ELECTRICAL NOTES:

1. PROVIDE AN OUTLET AT 4'-0" O.C. AT KITCHEN.

2. COORDINATE ELECTRCIAL CONNECTIONS TO DISHWASHER, GARBAGE DISPOSAL, REFRIGERATOR, STOVE/OVEN, WASHER CONNECTION, DRYER CONNECTION, FURNACE, AND HOT WATER HEATER. CONTRACTOR SHOULD NOT INFER THIS TO BE A COMPLETE LIST OF EQUPMENT THAT NEEDS TO BE COORDINATED WITH ELECTRICAL AND SHOULD DO HIS OWN DUE DILIGENCE.

3. PROVIDE GFCI ELECTRICAL OUTLETS IN KITCHEN, BATHROOMS, MUD ROOM, AND MECHANICAL ROOM.

4. FIXTURE OUTLETS IN CEILING (MINIMUM) SHALL BE 4" OCTAGONAL X 1-1/2" DEEP (4-11/16 OCTAGONAL X 2-1/2" DEEP WHERE REQUIRED TO ACCOMMODATE LARGER CONDUIT OR LARGER NUMBER OF WIRES).

5. GANG BOXES SHALL BE ONE PIECE (MINIMUM), 2-1/8" DEEP.

6. FLUSH MOUNT BOXES IN ALL FINISHED WALLS, INSTALL THE PLASTER RINGS IN DRYWALLED PLASTERED WALLS AND RAISED COVERS AS REQUIRED IN WALLS WITH OTHER FINISHES SO THAT THE COVER PLATES FIT TIGHTLY AGAINST BOXES OR RINGS. 3/16" MAXIMUM GAPS ARE ALLOWED FOR NONCOMBUSTIBLE WALLS.

7. SUPPORT ALL BOXES TO MAINTAIN PROPER ALIGNMENT AND RIGIDITY.

8. CLEAN BOXES OF ALL FOREIGN MATTER PRIOR TO THE INSTALLATION OR WIRING OR DEVICES.

9. MOUNTING HEIGHTS MIN. 4" ABOVE COUNTER TOPS IN KITCHEN AND BATHROOM, 16" ABOVE FINISHED FLOOR IN LIVING ROOM, AND BEDROOM

10. INSTALL PULL AND JUNCTION BOXES WHERE SHOWN ON THE DRAWINGS, AND WHERE REQUIRED FOR CHANGES IN DIRECTION, AT JUNCTION POINTS AND TO FACILITATE WIRE PULLING. FURNISH BOX SIZES IN ACCORDANCE WITH 2017 NEC UNLESS LARGER BOXES ARE INDICATED ON THE DRAWINGS.

11. ALL ELECTRICAL EQUIPEMENT IS TO BE INSTALLED PER THE 2017 NATIONAL ELECTRIC CODE.

FLOOR FINISH LEGEND

VINYL FAUX WOOD PLANK

CERAMIC TILE FLOORING

STRUCTURAL SHEARWALLS

HOLD DOWN LOCATION

SHEARWALL #1

SHEARWALL #2

SHEARWALLS PER SCHEDULE S1.3

Spark ARCHITECTURE
410 Central Ave
GREAT FALLS, MT 59401
T: 406.453.0001
F: 406.760.1788
SPARK-ARCHITECTURE.COM

LICENSED ARCHITECT SOPHIA A. SPARKS III 15346 GREAT FALLS, MT STATE OF MONTANA

FWP BIG SPRINGS RESIDENCE

2013 Fish Hatchery Rd, Lewistown, MT 59457

PHASE	REVISIONS
Re-bid	January 10, 2022

20011

FIRST FLOOR PLAN

A101

1/10/2022 3:07:19 AM

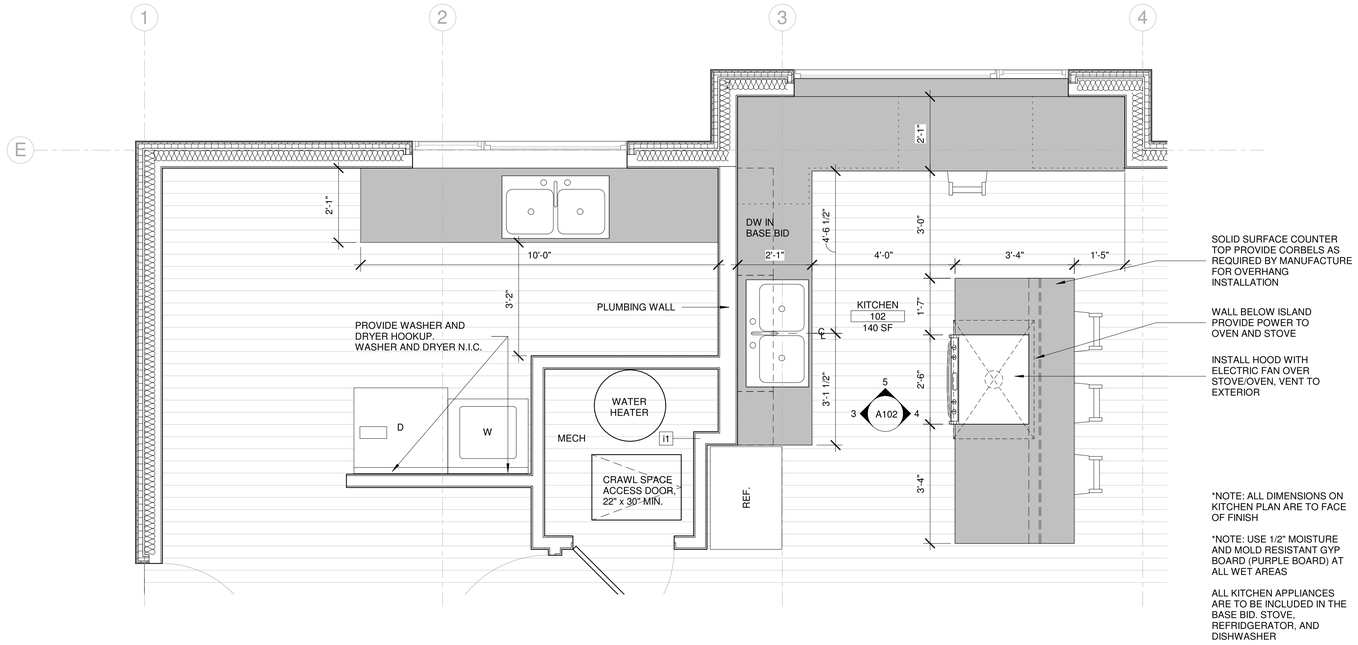

*NOTE: ALL DIMENSIONS ON KITCHEN PLAN ARE TO FACE OF FINISH

*NOTE: USE 1/2" MOISTURE AND MOLD RESISTANT GYP BOARD (PURPLE BOARD) AT ALL WET AREAS

ALL KITCHEN APPLIANCES ARE TO BE INCLUDED IN THE BASE BID. STOVE, REFRIDGERATOR, AND DISHWASHER

1 CALLOUT - KITCHEN DETAIL
SCALE: 1/2" = 1'-0"

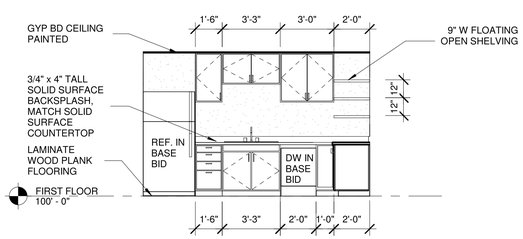

3 KITCHEN - WEST
SCALE: 1/4" = 1'-0"

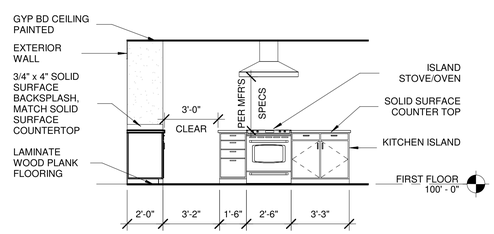

4 KITCHEN - EAST
SCALE: 1/4" = 1'-0"

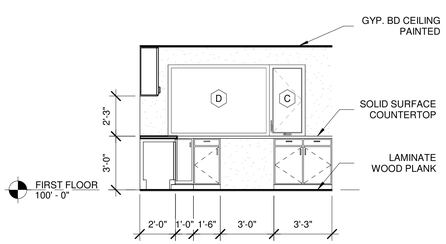

5 KITCHEN - NORTH
SCALE: 1/4" = 1'-0"

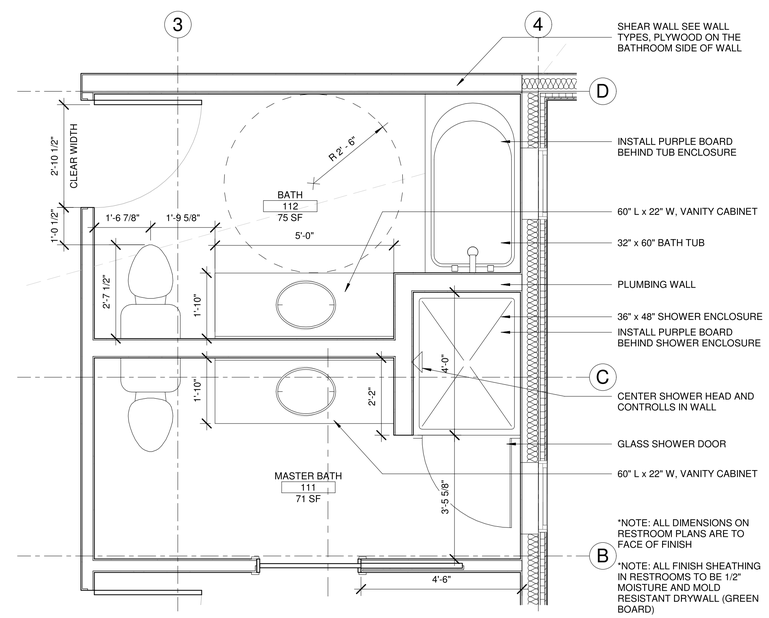

*NOTE: ALL DIMENSIONS ON RESTROOM PLANS ARE TO FACE OF FINISH

*NOTE: ALL FINISH SHEATHING IN RESTROOMS TO BE 1/2" MOISTURE AND MOLD RESISTANT DRYWALL (GREEN BOARD)

2 CALLOUT - BATHROOM DETAIL
SCALE: 1/2" = 1'-0"

Spark
ARCHITECTURE
410 Central Ave
GREAT FALLS, MT 59401
T: 406.453.0001
F: 406.760.1788
SPARK-ARCHITECTURE.COM

LICENSED ARCHITECT
SOPHIA A. SPARKS
GREAT FALLS, MT
STATE OF MONTANA

FWP BIG SPRINGS RESIDENCE

2013 Fish Hatchery Rd, Lewistown, MT 59457

PHASE	REVISIONS
Re-bid	January 10, 2022

20011

ENLARGED FLOOR PLAN

A102

1/10/2022 3:07:21 AM

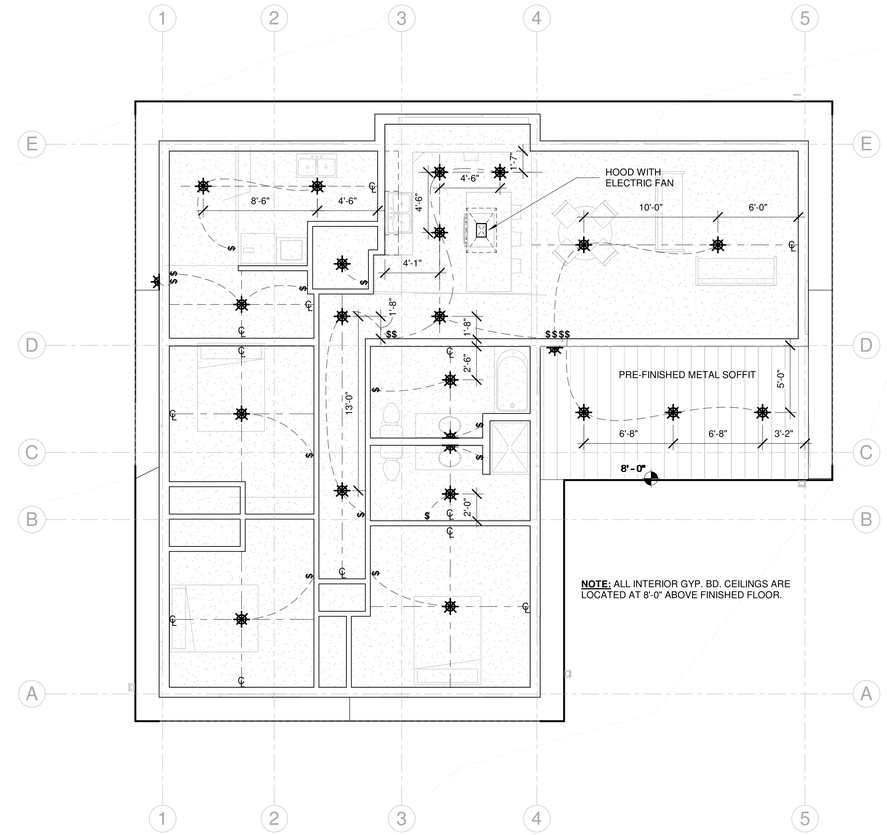

1 FIRST FLOOR REFLECTED CEILING PLAN
SCALE: 3/16" = 1'-0"

ELECTRICAL GENERAL NOTES:

1) GENERAL: UNLESS SPECIFICALLY INDICATED OTHERWISE, ALL WORK SHOWN ON THE ELECTRICAL DRAWINGS IS NEW WORK TO BE PROVIDED UNDER THIS CONTRACT.

2) COORDINATION: COORDINATE AND COOPERATE WITH ALL TRADES ON THE PROJECT.

3) RECORD DRAWINGS: SECURE AN EXTRA SET OF ELECTRICAL DRAWINGS TO BE KEPT ON SITE AND MARK, DAILY, THE DRAWINGS IN RED AS THE PROJECT PROGRESSES IN ORDER TO KEEP AN ACCURATE RECORD OF ALL DEVIATIONS BETWEEN THE WORK SHOWN ON THE DRAWINGS AND THE WORK WHICH IS ACTUALLY INSTALLED. THESE MARKED DRAWINGS SHALL REFLECT ANY AND ALL CHANGES AND REVISIONS TO THE ORIGINAL DESIGN WHICH EXISTS IN THE COMPLETED WORK. DELIVER THE MARKED DRAWINGS TO THE <ARCHITECT/ENGINEER> AT PROJECT CLOSE-OUT.

4) TESTS: TEST ALL WIRING FOR CONTINUITY AND GROUNDS BEFORE CONNECTING ANY FIXTURES OR DEVICES. PERFORM INSULATION RESISTANCE TESTS ON ALL WIRING #8 OR LARGER TO ENSURE THAT ALL PORTIONS ARE FREE FROM SHORT-CIRCUITS AND GROUNDS.

5) INSPECTIONS: ARRANGE ALL NECESSARY INSPECTIONS. DELIVER ALL REQUIRED INSPECTION CERTIFICATES TO THE OWNER.

6) GROUNDING: PROVIDE GROUNDING IN ACCORDANCE WITH THE NEC FOR THE ELECTRICAL SYSTEM INCLUDING EQUIPMENT FRAMES CONDUITS, SWITCHES, CONTROLLERS, WIRE-WAYS, NEUTRAL CONDUCTORS, AND OTHER EQUIPMENT. PROVIDE A GROUNDING CONDUCTOR IN ALL POWER CIRCUITS.

7) LABELS: PROVIDE LABELS FOR ALL PANELBOARDS, CABINETS, SAFETY SWITCHES, MOTOR-DISCONNECT SWITCHES, AND MOTOR CONTROLLERS. LABELS SHALL BE MACHINE ENGRAVED, LAMINATED PLASTIC, PERMANENTLY ATTACHED WITH SELF-TAPPING SCREWS OR RIVETS. DO NOT USE SELF-ADHESIVE LABELS. J-BOX LABELING: LABEL ALL JUNCTION BOXES WITH PERMANENT MARKER IDENTIFYING CIRCUIT NUMBER AND PANELBOARD OF CIRCUITS WITHIN.

8) PANEL DIRECTORY: PROVIDE TYPEWRITTEN PANELBOARD DIRECTORY CARD IN EACH PANELBOARD INCLUDING EXISTING PANELBOARDS MODIFIED FOR THIS PROJECT WITH CIRCUIT LOAD INFORMATION AND ROOM NUMBER CLEARLY IDENTIFIED. USE ACTUAL ROOM NUMBERS IN THE BUILDING, NOT THE ROOM NUMBERS SHOWN ON THE CONTRACT DRAWINGS, AS THEY ARE OFTEN DIFFERENT.

9) MOTOR COORDINATION: MOTORS, MOTOR STARTERS, CONTROLLERS, INTEGRAL DISCONNECT SWITCHES, AND CONTACTORS SHALL BE PROVIDED WITH THEIR RESPECTIVE PIECES OF EQUIPMENT BY THE EQUIPMENT SUPPLIER. COMMUNICATE WITH THE TRADES PROVIDING THE EQUIPMENT, VERIFYING ALL REQUIREMENTS, PROVIDE ALL ELECTRICAL CONNECTIONS REQUIRED THEREIN, AND INSTALL MOTOR STARTERS.

10) MOTOR DISCONNECTS: ALL MOTORS SHALL HAVE DISCONNECTING MEANS. MOTOR FUSE PROTECTION: WHERE FUSE PROTECTION IS SPECIFICALLY REQUIRED BY THE EQUIPMENT MANUFACTURER, PROVIDE FUSE SWITCHES IN LIEU OF NON-FUSE SWITCHES OR IN LIEU OF ENCLOSED CIRCUIT BREAKERS, OR OTHER DEVICES INDICATED.

11) CONNECTION DETAILS: SECURE APPROVED SHOP DRAWINGS SHOWING WIRING DIAGRAMS, ROUGH-IN AND HOOK UP DETAILS FROM OTHER INVOLVED CONTRACTORS FOR EQUIPMENT WHICH MUST BE CONNECTED ELECTRICALLY.

12) EQUIPMENT DETAILS: MECHANICAL EQUIPMENT WILL BE FURNISHED AND INSTALLED BY THE MECHANICAL CONTRACTOR. THE LOCATIONS SHOWN ON THE ELECTRICAL DRAWINGS ARE APPROXIMATE. COORDINATE WITH THE MECHANICAL CONTRACTOR TO DETERMINE THE EXACT LOCATION OF EACH PIECE OF EQUIPMENT AND DETERMINE THE EXACT ROUGH-IN AND CONNECTION REQUIREMENTS.

13) STARTER MOUNTING: WHERE AN INDIVIDUALLY MOUNTED SAFETY SWITCH, STARTER OR CIRCUIT BREAKER IS SHOWN ADJACENT TO ITS RESPECTIVE LOAD AND NOT MOUNTED ON A WALL, PROVIDE ALL SUPPORTS, BRACKETS, ANCHORING, ETC. NECESSARY TO PROPERLY SUPPORT THE DEVICE. FIRE PROOFING: FOR ANY WALL OR FLOOR PENETRATIONS THROUGH FIRE RATED STRUCTURES PROVIDE FIRE-PROOFING TO SEAL ALL THE PENETRATIONS AFTER THE CONDUIT HAS BEEN INSTALLED. FIRE PROOFING FOR PENETRATIONS SHALL BE UL APPROVED PER THE THE PENETRATION MADE IN ORDER TO MAINTAIN FIRE RATED INTEGRITY OF THE STRUCTURE. CLEAN UP: ON PROJECT CLOSE-OUT, CLEAN ALL ELECTRICAL DEVICES, LIGHTING FIXTURES, LAMPS AND LENSES, AND REMOVE ALL PAINT SPATTERS FROM DEVICES, FIXTURES, AND PLATES. REPLACE ALL INOPERATIVE LAMPS.

14) OWNER FURNISHED EQUIPMENT: CONTRACTOR SHALL OBTAIN CUT SHEETS, INSTALLATION DATA, AND ROUGH-IN REQUIREMENTS FOR OWNER FURNISHED, CONTRACTOR INSTALLED EQUIPMENT AND COORDINATE ROUGH-IN AND POWER REQUIREMENTS WITH THE OWNER'S REPRESENTATIVE PRIOR TO STARTING ANY ASSOCIATED WORK.

15) CONDUIT ROUTING: ALL CONDUIT RUN OVERHEAD SHALL BE RUN AT THE BOTTOM OF THE FLOOR, ROOF STRUCTURE, OR LOWEST CHORD OF JOIST SPACE (AS APPLICABLE) ABOVE IN ORDER TO AVOID CONFLICTS WITH OTHER TRADES.

16) EQUIPMENT DEMONSTRATION: PROVIDE A DEMONSTRATION OF THE OPERATION OF ALL ELECT.

17) MECHANICAL EQUIPMENT ELECTRICAL CONNECTIONS: THE ELECTRICAL CONTRACTOR SHALL FURNISH, INSTALL AND CONNECT ALL POWER WIRING TO ALL MECHANICAL CONTRACTOR FURNISHED EQUIPMENT. THE MECHANICAL CONTRACTOR SHALL FURNISH, INSTALL AND CONNECT ALL CONTROL WIRING TO ALL FURNISHED EQUIPMENT, INCLUDING CONTROL DEVICES, STARTER, AND INTEGRAL DISCONNECT SWITCHES OF MECHANICAL CONTRACTOR FURNISHED EQUIPMENT.

HVAC AND WATER FILTRATION:

HVAC: PROVIDE AND INSTALL A HIGH-EFFICIENCY CONDENSING FORCED-AIR GAS FURNACE, INSTALLED IN THE CRAWLSPACE WITH SUPPLY DUCTWORK DISTRIBUTED THROUGH CRAWLSPACE. PROVIDE IN-WALL RETURN AIR AND FILTER AT MAIN FLOOR FOR EASE OF FILTER CHANGE. SIZE SYSTEM IN ACCORDANCE WITH CURRENT ENERGY CODE REQUIREMENTS, AND SUBMIT SHOP DRAWINGS FOR REVIEW.

WATER FILTRATION: PROVIDE AND INSTALL NEW WATER FILTRATION SYSTEM FOR THE RESIDENCE - INCLUDING PURCHASE AND INSTALLATION BY CONTRACTOR:
i. -2 CULLIGAN STANDARD DUTY WHOLE HOUSE FILTERS, (CLEAR PLASTIC TO MONITOR FILTER LIFE).
1. 1st FILTER IN LINE IS A COARSE FILTER @ 20 MICRONS.
2. 2nd FILTER IN LINE IS A FINE FILTER @ 5 MICRONS.

GENERAL NOTES - CEILING PLAN

1. CEILING HEIGHTS ARE FROM FINISHED FLOOR TO FINISHED SURFACE OF CEILING
2. CEILING HEIGHTS ARE MEASURED ABOVE FLOOR OF ROOM THEY ARE IN.
3. ALL CEILINGS ON FIRST FLOOR ARE TO BE TAPED, TEXTURED, AND PAINTED
4. NO CEILINGS IN THE BASEMENT SHALL BE INCLUDED IN THE BASE BID U.N.O.

CEILING FINISH LEGEND

PAINTED GYPSUM BOARD CEILING

PRE FINISHED METAL SOFFIT, WHITE

PROVIDE JUNCTION BOX FOR ELECTRICAL CONNECTION

NEW LIGHT FIXTURE

NEW EXTERIOR RATED, WALL MOUNTED LIGHT FIXTURE

NOTE:
1) IN RESTROOMS, AND MECHANICAL ROOM USE A MOLD RESISTANT GYP BOARD, (PURPLE BOARD).

Spark
ARCHITECTURE
410 Central Ave
GREAT FALLS, MT 59401
T: 406.453.0001
F: 406.760.1788
SPARK-ARCHITECTURE.COM

LICENSED ARCHITECT
SOPHIA A. SPARK
GREAT FALLS, MT
STATE OF MONTANA

FWP BIG SPRINGS RESIDENCE

2013 Fish Hatchery Rd, Lewistown, MT 59457

PHASE	REVISIONS
Re-bid	January 10, 2022

20011

REF. CEILING PLAN

A200

1/10/2022 3:07:21 AM

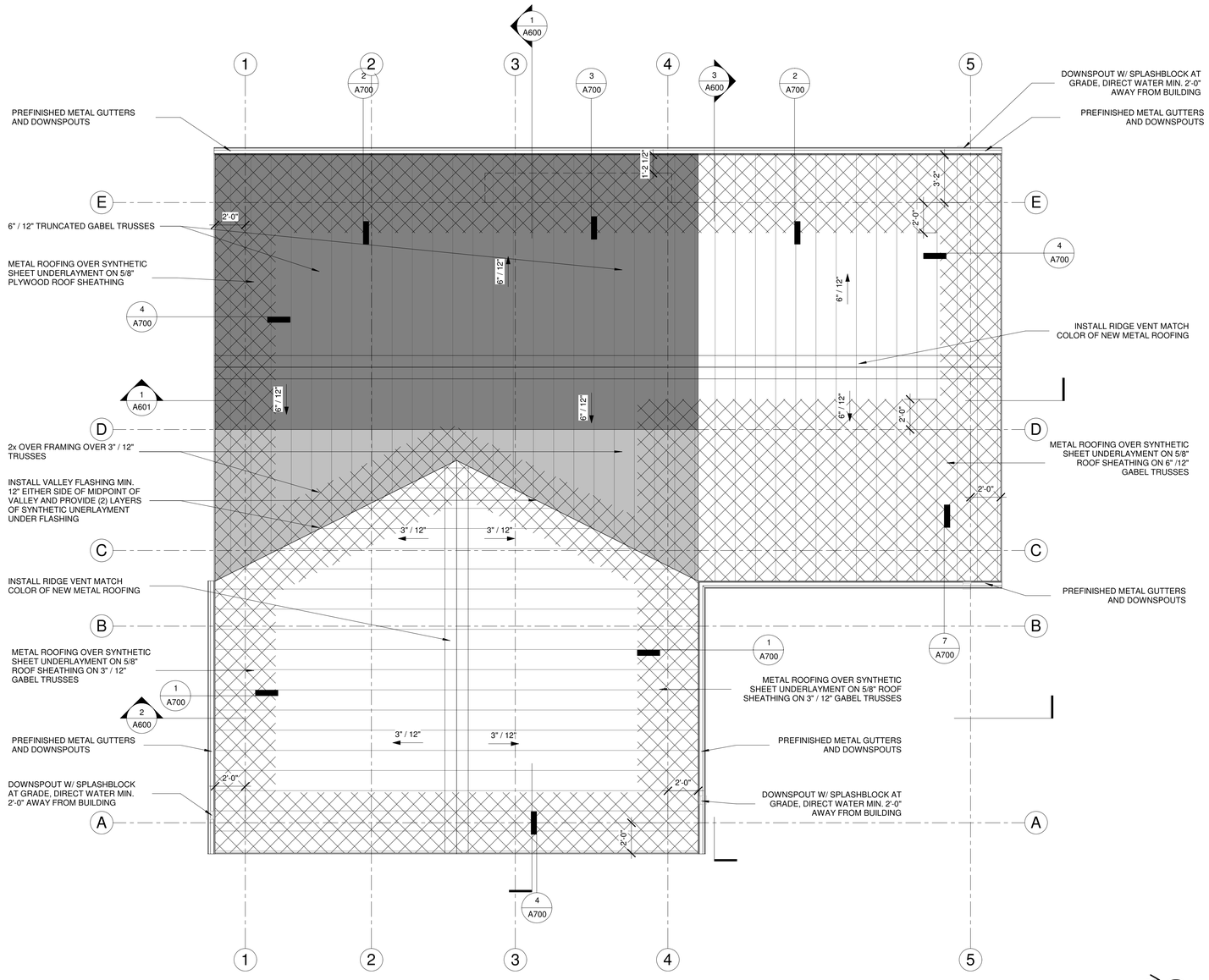

1 ROOF PLAN

SCALE: 1/4" = 1'-0"

GENERAL NOTES, ROOFING

1. ICE AND WATER PROTECTOR TO BE APPLIED ABOVE ALL EAVES, FROM ROOF EDGE TO A MINIMUM OF 24" BEYOND THE INTERIOR SURFACE OF THE ENVELOPE WALL OR PER MANUFACTURES SPECIFICATIONS

2. LOCATE AND INSTALL SNOW GUARD PER MANUFACTURES INSTRUCTIONS

3. PROVIDE METAL ROOF LENGTHS LONG ENOUGH TO COVER ENTIRE LENGTH OF ROOF WHERE POSSIBLE. IF NOT POSSIBLE PROVIDE A MINIMUM OF 1'-0" END LAP TO METAL ROOF SPLICE AND PROVIDE ICE AND WATER SHILED MIN. 24" CENTERED UNDER ALL ROOF SPLICES.

4. ATTACH PLYWOOD TO TRUSSES USING 10D NAILS AT 6'-0" O.C. AROUND PERIMETER AND 12'-0" O.C. IN FIELD.

5. VENT PER CODE AND MANUFACTURER'S RECOMMENDATIONS.

ROOF VENTILATION CALCULATION

ATTIC SF = 1448 SF /150 = 9.65 SF * 144 = 1390 SQ IN VENTILATION
696 SQ. IN. AT SOFFIT = MIN. 7" WIDE EAVE VENTS
696 SQ. IN. AT RIDGE = 1 1/2" TALL RIDGE VENTS

ROOFING MATERIAL LEGEND

- METAL STANDING SEAM ROOFING 24 GA METAL, 2" RIB HEIGHT STANDING SEAM MECHANICAL LOCK, 14" PANELS

  DEDUCT ALTERNATE #1: REPLACE METAL ROOFING WITH 3 TAB ASPHALT SHINGLES MIN. 110 WIND SPEED
- ICE AND WATER PROTECTOR INSTALL MIN 2' INSIDE THE INTERIOR WALL
- 2x OVER FRAMING OVER 3" / 12" TRUSSES
- 6" / 12" TRUNCATED TRUSSES

Spark
ARCHITECTURE
410 Central Ave
GREAT FALLS, MT 59401
T: 406.453.0001
F: 406.760.1788
SPARK-ARCHITECTURE.COM

LICENSED ARCHITECT
SOPHIA A. SPARKMAN
GREAT FALLS, MT
STATE OF MONTANA

FWP BIG SPRINGS RESIDENCE

2013 Fish Hatchery Rd, Lewistown, MT 59457

PHASE	REVISIONS
Re-bid	January 10, 2022

20011

ROOF PLAN

A300

1/10/2022 3:07:22 AM

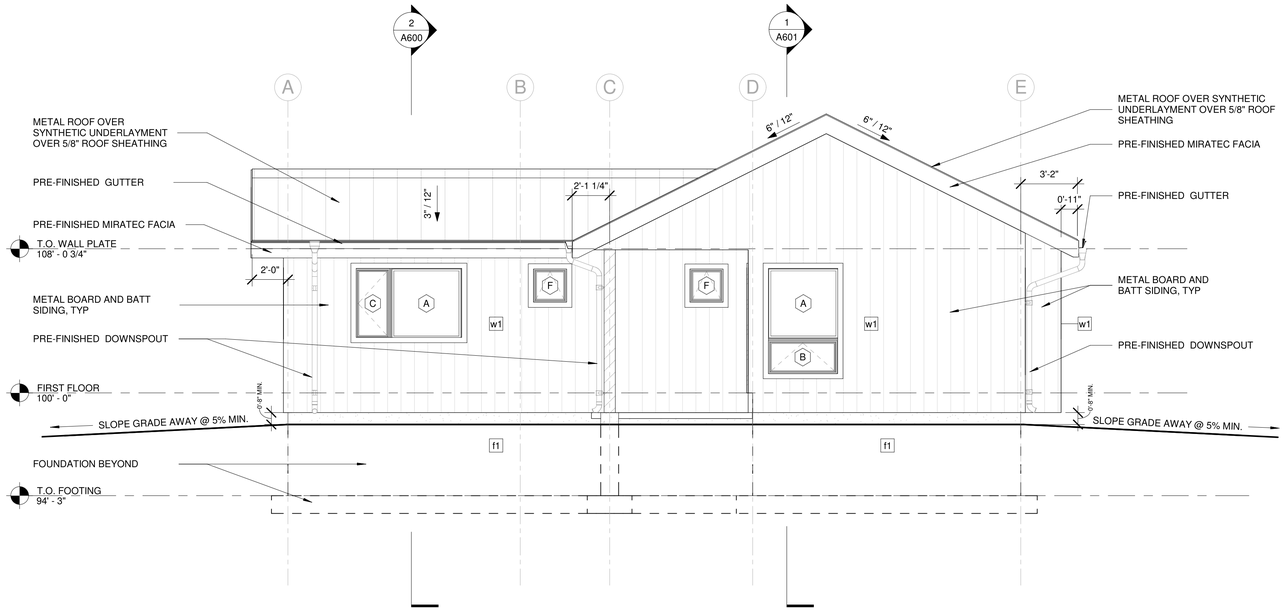

1 ELEVATION - PROJECT EAST

SCALE: 1/4" = 1'-0"

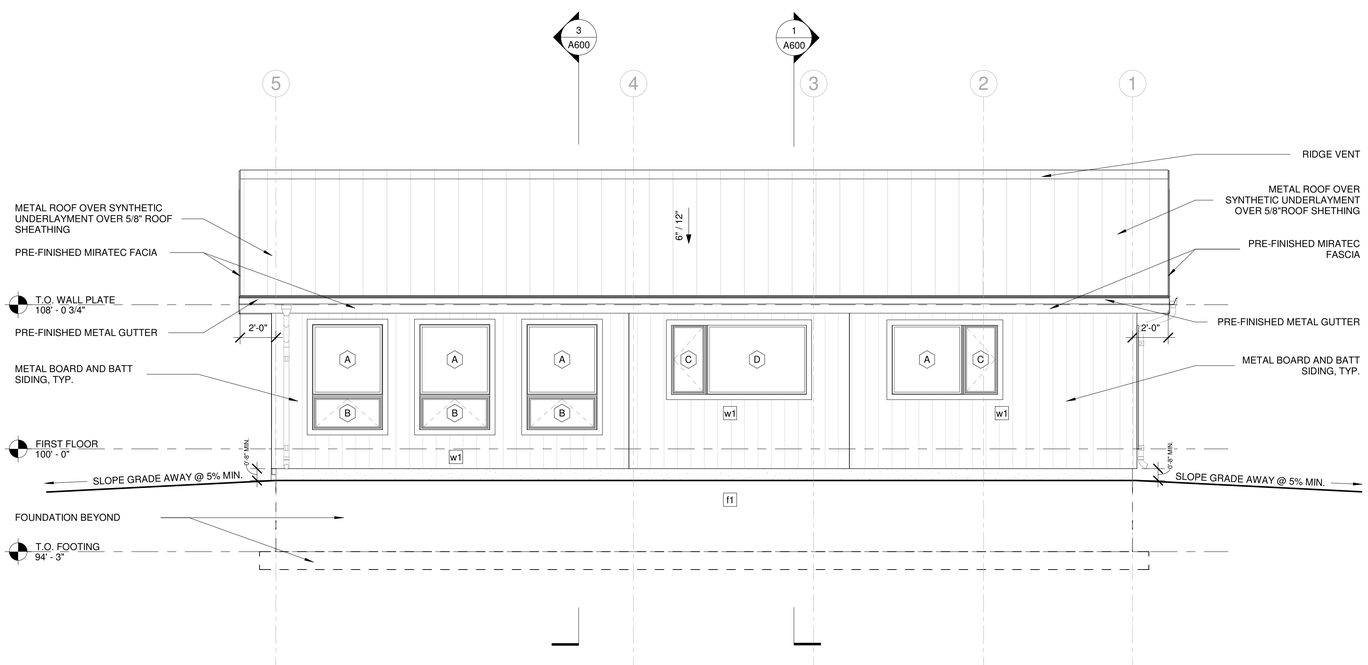

2 ELEVATION - PROJECT NORTH

SCALE: 1/4" = 1'-0"

METAL BOARD AND BATTEN SIDING NOTES

BOARD AND BATTEN APPLICATION
THE STARTER STRIP IS INSTALLED VERTICALLY AND PANELS LOCK TOGETHER VERTICALLY. WHEN RUNNING EXTRA-LONG LENGTHS OF BOARD AND BATTEN, Z STRIP SHOULD BE USED TO START AND STOP THE PANELS

ACCESSORIES AND STARTER
SNAP A CHALK LINE THAT IS PARALLEL TO THE EAVES OR TOPS OF WINDOWS AT THE BOTTOM OF THE BUILDING. USE THIS LINE TO INSTALL 1" RAT GUARD AT THE BOTTOM OF THE BUILDING. TRIM WINDOWS AND DOORS COMPLETELY WITH J-CHANNEL OR FINISH TRIM. TO INSTALL STARTER STRIP CORRECTLY DROP A PLUMB LINE OFF CENTER OF THE GABLE PEAK. MEASURE SIDEWAYS OFF THIS LINE TO SET YOUR FIRST PANEL.

FIRST ROW
MEASURE THE LENGTH OF THE FIRST ROW AND CUT TO LENGTH. CUT THE BATTEN OFF OF THIS PIECE AND INSTALL CUT EDGE OF PANEL UNDER THE BOTTOM EDGE OF STARTER STRIP. CUT THE OTHER ROW TO LENGTH AND LOCK THIS PANEL INTO THE STARTER STRIP NAIL BOTH ROWS COMPLETELY THROUGH NAILING FLANGES FOLLOWING PROPER NAILING GUIDELINES.

SUBSEQUENT ROWS
INSTALL REST OF PANELS WORKING BOTH IN RIGHT AND LEFT DIRECTIONS FROM THE TWO CENTER PANELS. THIS TECHNIQUE WILL ALLOW FOR EVEN SPACING OF BATTENS. YOU CAN ALSO NAIL A STARTER STRIP AT THE CORNER VERTICALLY AND INSTALL PANELS IN ONE DIRECTION, THIS SHOULD BE DONE WHEN BATTENS DON'T HAVE TO BE SPACED EVENLY.

DOOR AND WINDOW CUTS
BE SURE TO INSTALL FINISH TRIM ON VERTICAL CUTS TO HIDE CUT EDGES OF SIDING THAT MAY BE VISIBLE. FURRING MAY BE NEEDED TO BUILD OUT PANEL IF VERTICAL CUTS ARE MADE IN BATTENS. BE SURE TO NAIL FURRING ON FIRST THEN NAIL ON FIRST THEN NAIL ON FINISH TRIM, THIS TECHNIQUE SHOULD ALSO BE USED AT O.C.P

INSIDE CORNERS
TWO J-CHANNELS AT RIGHT ANGLES MAY BE USED FOR THE INSIDE CORNERS. INSTALL A SMALL BEAD OF CAULKING WHERE THE TWO J-CHANNELS MEET ONE ANOTHER. J-CHANNELS SHOULD BE INSTALLED AT FULL LENGTHS, 1/2" BELOW THE BOTTOM OF THE STARTER STRIP AND EXTENDING TO THE EAVE LINE OR GABLE TRIM. IF A SHORTER PIECE IS NEEDED TO REACH THE EAVE OR GABLE TRIM BE SURE TO OVERLAP THE BOTTOM PIECE WITH THE TOP PIECE. J-CHANNEL FLANGES SHOULD BE NAILED EVERY 12", MAKING SURE NOT TO DRIVE THE NAILS TO TIGHT. DRIVING NAILS TO TIGHT MAY CAUSE A DISTORTION TO OCCUR IN THE J-CHANNEL. J-CHANNELS CAN EASILY BE CUT WITH A PAIR OF AVIATION SNIPS.

CLEAN UP
USE A MILD SOAP AND WATER FOR CLEAN-UP WITH A SOFT CLOTH OR SPONGE. DO NOT RUB EXCESSIVELY, THIS COULD CAUSE DAMAGE TO THE SURFACE. DO NOT USE HARSH ABRASIVES. MINERAL SPIRITS MAY BE USED SPARINGLY TO REMOVE GREASE OR ASPHALT STAINS

JOB SITE
RE-INSTALL ALL FIXTURES AND WIRES THAT WERE REMOVED PRIOR TO INSTALLATION. SCRAP PIECES, SIDING BOXES, NAILS DEBRIS, ETC. SHOULD BE REMOVED DAILY. REPLACING DAMAGED PANELS CUT DAMAGED PANEL JUST ABOVE THE CENTER WITH AN ELECTRIC SHEAR. REMOVE THE BOTTOM SECTION OF DAMAGED PANEL. DO NOT REMOVE REMAINING SIDING PANEL. REMOVE THE TOP LOCK OF THE REPLACEMENT PANEL AS HIGH UNDER THE LOCK AS POSSIBLE. REMOVE ANY BURRS OR IMPERFECTIONS THAT MAY HAVE OCCURRED WHILE CUTTING. SLIP THE NEW PIECE OF SIDING UNDER THE OLD LOCK. IF THIS LOCK IS TO TIGHT OPEN GAP WITH A FLAT SCREWDRIVER. APPLY ADHESIVE CAULK ON THE FULL LENGTH OF THE OLD PANEL 1/2" TO 3/4" UNDER OLD LOCK. INSTALL NEW PIECE OF SIDING CAREFULLY OVER THE TOP OF THE ADHESIVE CAULK AND INTO THE OLD LOCK. PRESS NEW PANEL INTO THE CAULK SO THAT IT MAKES CONTACT THE FULL WIDTH OF SIDING. DO NOT NAIL THIS PANEL INTO PLACE. USE THIS PROCEDURE FOR ALL REPLACEMENT. NAIL THROUGH WEEP HOLE WITH STAINLESS STEEL TRIM NAILS TO HOLD THE PANEL IN PLACE.

ADDITIONAL TIPS
IT MAY BE NECESSARY TO LEAVE J-CHANNELS OR CORNER POSTS LOOSE AROUND OPENINGS TO HELP FOR INSTALLATION OF SHORT SIDING PANELS. YOU MAY ALSO HAVE TO LEAVE J-CHANNELS OFF TO GET SHORT PIECES IN AND SLIP A J-CHANNEL IN AFTER INSTALLATION. NAILING FOR THIS PROCEDURE CAN BE DONE INTO THE BACK SIDE OF THE J-CHANNEL AT EVERY OTHER ROW INTO THE CASING WHICH IT IS BUTTED INTO. A NAIL SET WILL HELP IN THIS PROCEDURE TO SET YOUR NAILS INTO THE WOOD. IF LEAVING J-CHANNELS LOOSE BOW OUT ENDS AND SLIP SIDING INTO J-CHANNELS AND LOCK TOGETHER.

ELEVATION FINISHES

SIDING - BOARD AND BATTEN SIDING
BASIS OF DESIGN; LYNNRICH METAL SEAMLESS SIDING, 6" BOARD AND BATTEN

ROOFING - METAL STANDING SEAM
24 GA METAL, 2" RIB HEIGHT
STANDING SEAM
MECHANICAL LOCK, 14" PANELS

Spark
ARCHITECTURE
410 Central Ave
GREAT FALLS, MT 59401
T: 406.453.0001
F: 406.760.1788
SPARK-ARCHITECTURE.COM

LICENSED ARCHITECT
SOPHIA A. SPARKS
GREAT FALLS, MT
STATE OF MONTANA

FWP BIG SPRINGS RESIDENCE

2013 Fish Hatchery Rd, Lewistown, MT 59457

PHASE	REVISIONS
Re-bid	January 10, 2022

20011

EXT. ELEVATIONS

A400

1/10/2022 3:07:23 AM

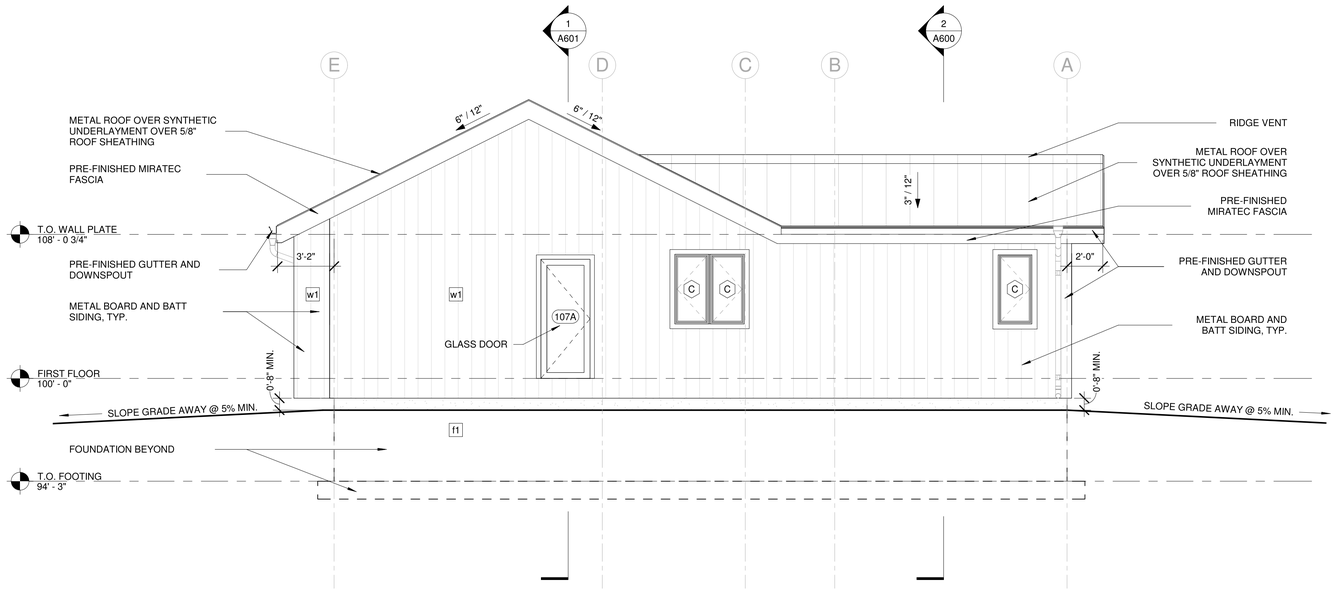

1 ELEVATION - PROJECT WEST

SCALE: 1/4" = 1'-0"

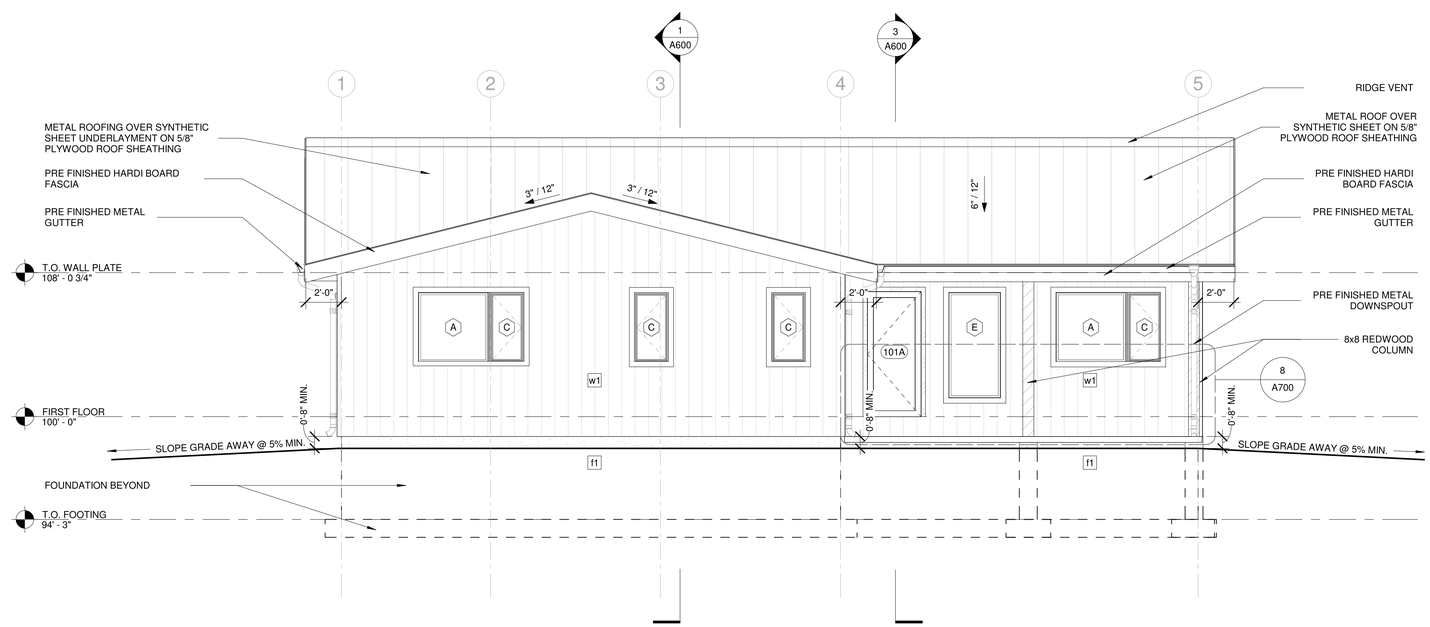

2 ELEVATION - PROJECT SOUTH

SCALE: 1/4" = 1'-0"

ELEVATION FINISHES

SIDING - BOARD AND BATTEN SIDING
BASIS OF DESIGN: LYNNRICH METAL SEAMLESS SIDING, 6" BOARD AND BATTEN

ROOFING - METAL STANDING SEAM
24 GA METAL, 2" RIB HEIGHT STANDING SEAM
MECHANICAL LOCK, 14" PANELS

Spark
ARCHITECTURE
410 Central Ave
GREAT FALLS, MT 59401
T: 406.453.0001
F: 406.760.1788
SPARK-ARCHITECTURE.COM

LICENSED ARCHITECT
SOPHIA A. SPARKS
GREAT FALLS, MT
STATE OF MONTANA

FWP BIG SPRINGS RESIDENCE

2013 Fish Hatchery Rd, Lewistown, MT 59457

PHASE	REVISIONS
Re-bid	January 10, 2022

20011

EXT. ELEVATIONS

A401

1/10/2022 3:07:24 AM

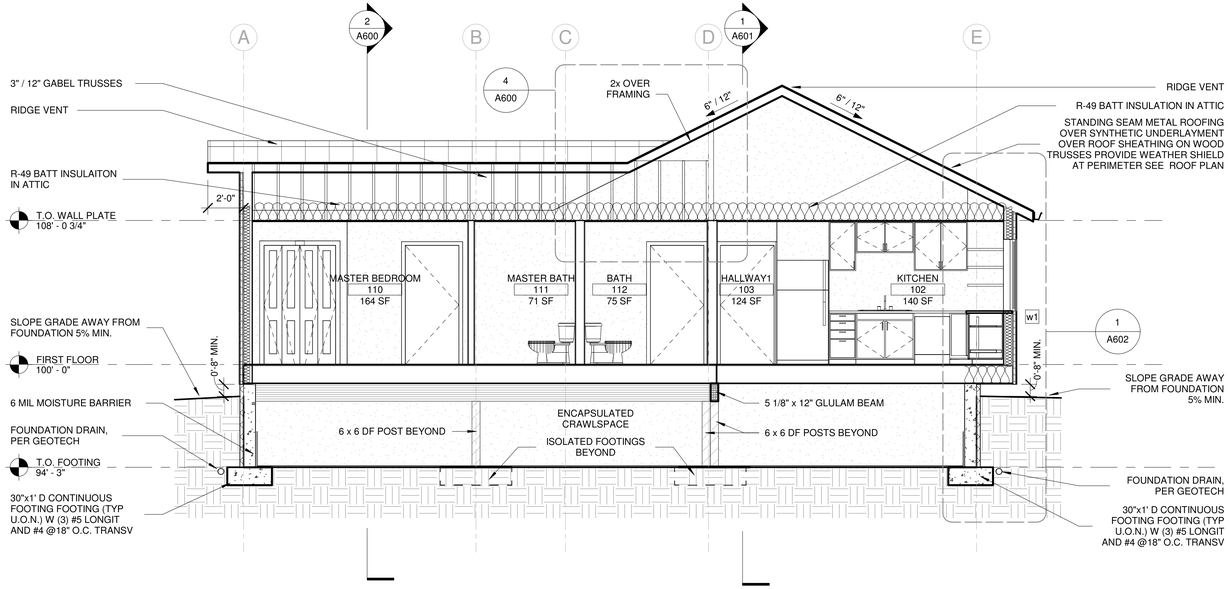

1 SECTION - WEST/EAST

SCALE: 1/4" = 1'-0"

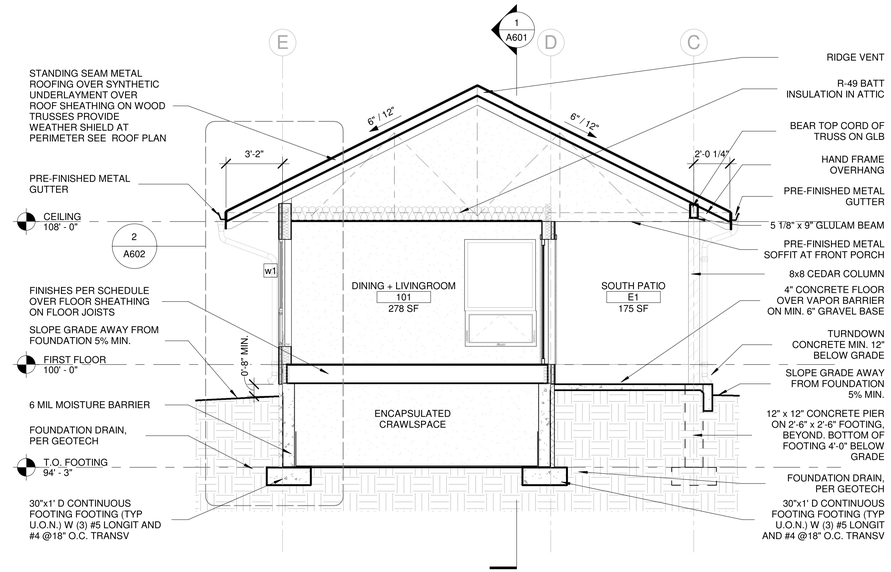

3 SECTION WEST/EAST LIVINGROOM

SCALE: 1/4" = 1'-0"

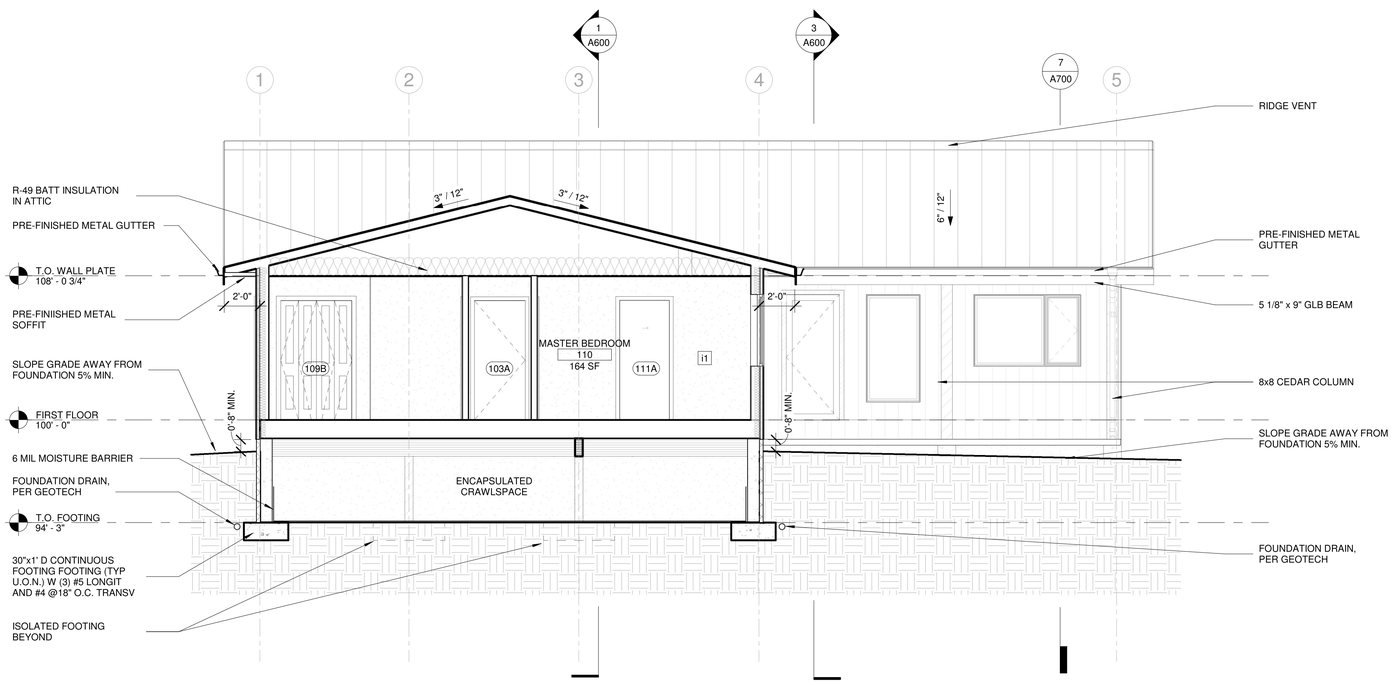

2 SECTION - NORTH/SOUTH BEDROOMS

SCALE: 1/4" = 1'-0"

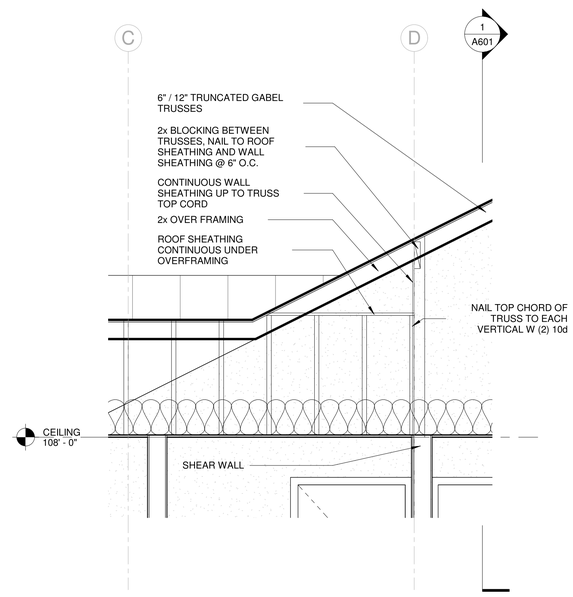

4 OVERFRAMING

SCALE: 1/2" = 1'-0"

Spark
ARCHITECTURE
410 Central Ave
GREAT FALLS, MT 59401
T: 406.453.0001
F: 406.760.1788
SPARK-ARCHITECTURE.COM

FWP BIG SPRINGS RESIDENCE

2013 Fish Hatchery Rd, Lewistown, MT 59457

PHASE	REVISIONS
Re-bid	January 10, 2022

20011

SECTIONS

A600

1/10/2022 3:07:26 AM

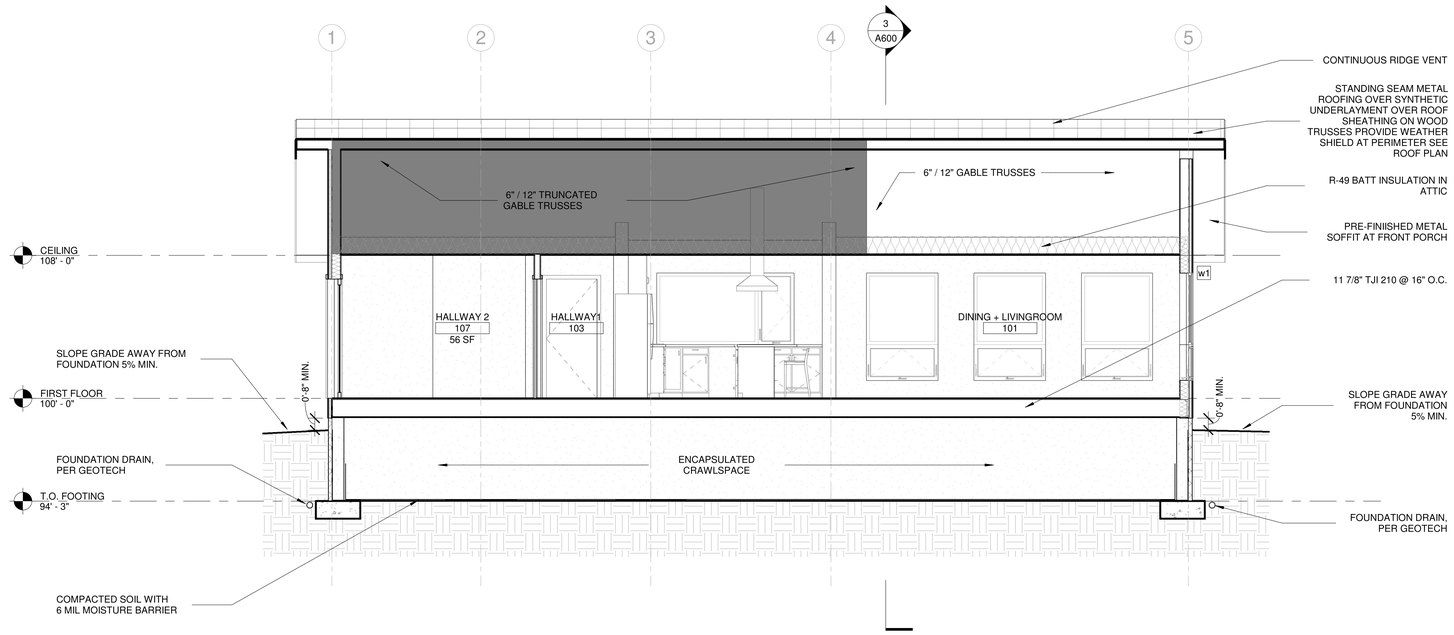

1 SECTION - NORTH/SOUTH

SCALE: 1/4" = 1'-0"

Spark
ARCHITECTURE

410 Central Ave
GREAT FALLS, MT 59401
T: 406.453.0001
F: 406.760.1788
SPARK-ARCHITECTURE.COM

LICENSED ARCHITECT
SOPHIA A. SPARKLIN
GREAT FALLS, MT
STATE OF MONTANA

FWP BIG SPRINGS RESIDENCE

2013 Fish Hatchery Rd, Lewistown, MT 59457

PHASE	REVISIONS
Re-bid	January 10, 2022

20011

SECTIONS

A601

1/10/2022 3:07:27 AM

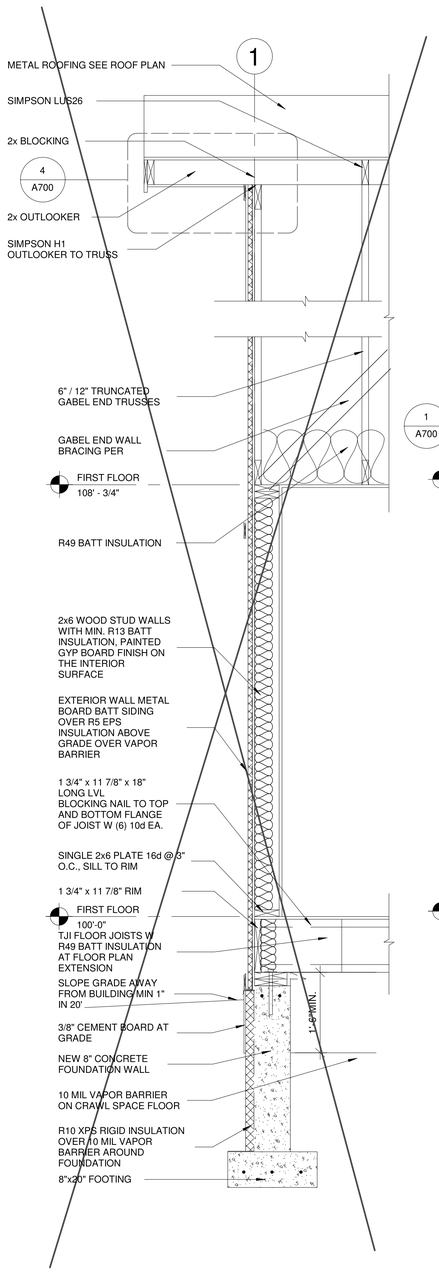

5 WEST WALL SECTION @ BASEMENT
SCALE: 3/4" = 1'-0"

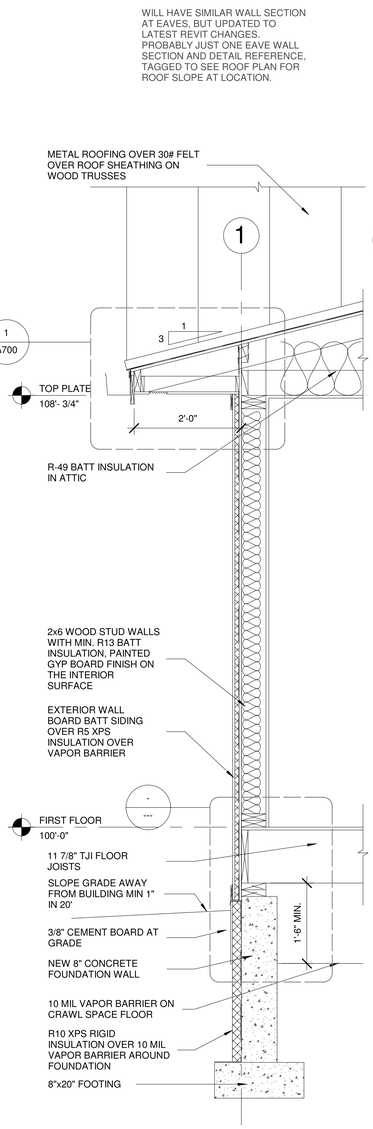

4 WEST WALL SECTION-NO BASEMENT
SCALE: 3/4" = 1'-0"

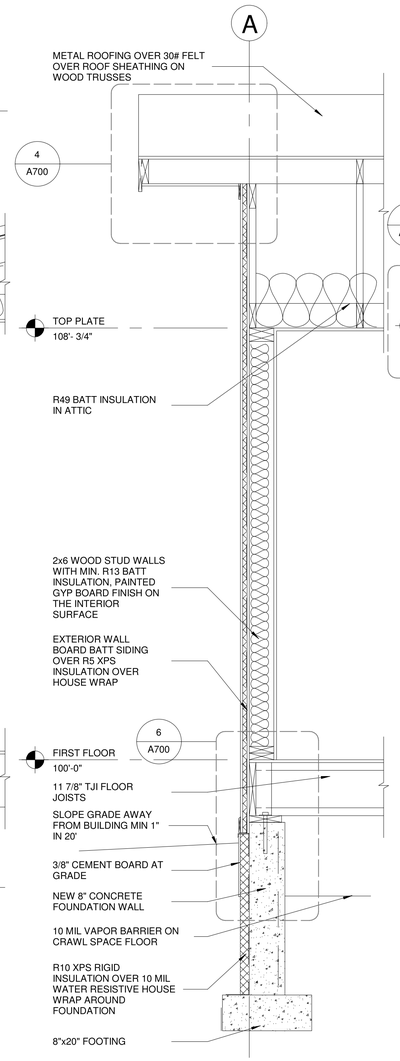

3 SOUTH WALL SECTION-NO BASEMENT
SCALE: 3/4" = 1'-0"

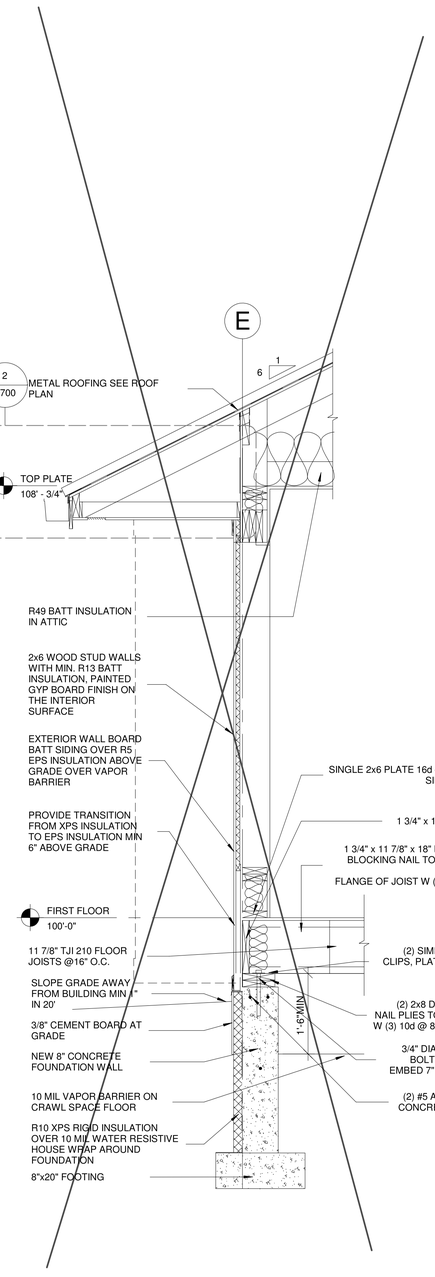

2 NORTH WALL SECTION
SCALE: 3/4" = 1'-0"

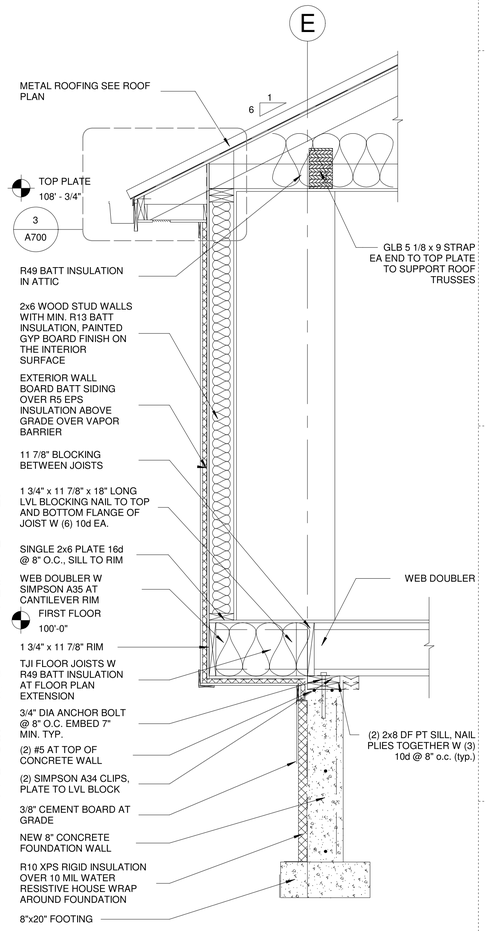

1 NORTH WALL SECTION @ OVERHANG
SCALE: 3/4" = 1'-0"

Spark
ARCHITECTURE
410 Central Ave
GREAT FALLS, MT 59401
T: 406.453.0001
F: 406.760.1788
SPARK-ARCHITECTURE.COM

LICENSED ARCHITECT
SOPHIA A. SPARKMAN
LICENSE NO. 2018
GREAT FALLS, MT
STATE OF MONTANA

FWP BIG SPRINGS RESIDENCE

2013 Fish Hatchery Rd, Lewistown, MT 59457

PHASE	REVISIONS
Re-bid	January 10, 2022

20011

WALL SECTIONS

A602

1/10/2022 3:07:28 AM

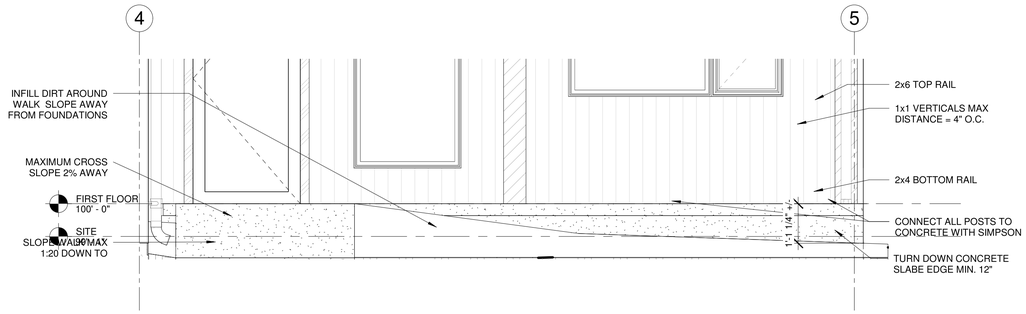

8 ELEVATION - HANDRAIL
SCALE: 1/2" = 1'-0"

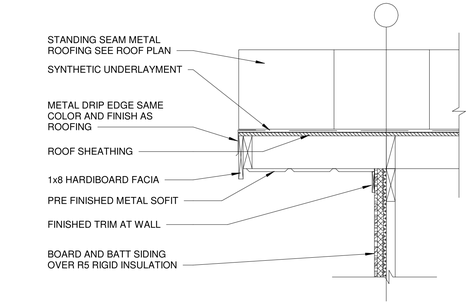

4 RAKE
SCALE: 1" = 1'-0"

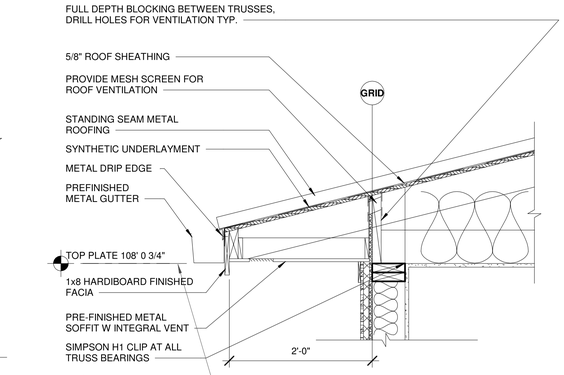

1 EAVE 1
SCALE: 1" = 1'-0"

ALL EAVES SHOULD BE AT TOP PLATE, WILL UPDATE DETAILS TO REFLECT.

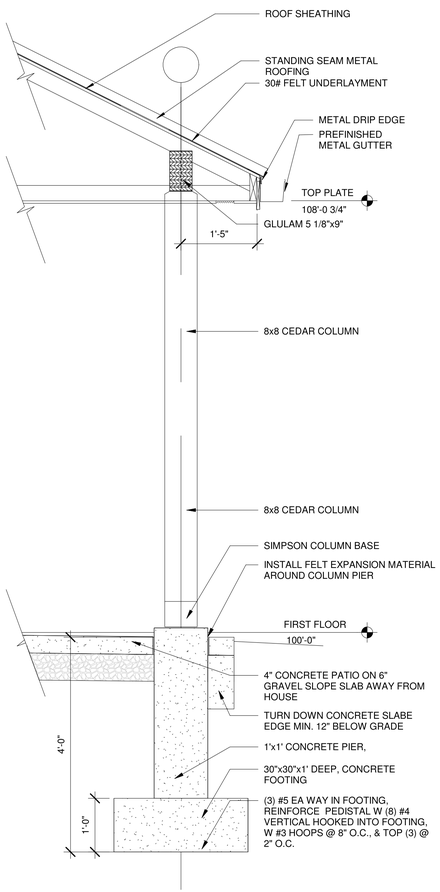

7 EXTERIOR COLUMN
SCALE: 3/4" = 1'-0"

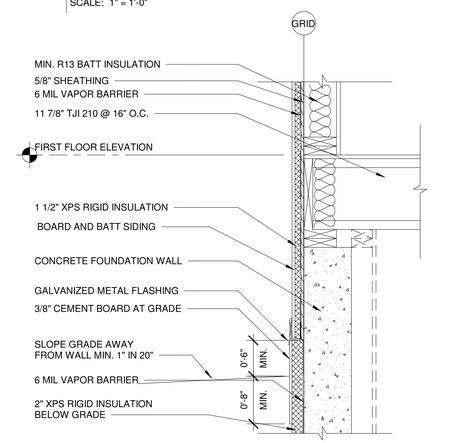

5 RIM
SCALE: 1" = 1'-0"

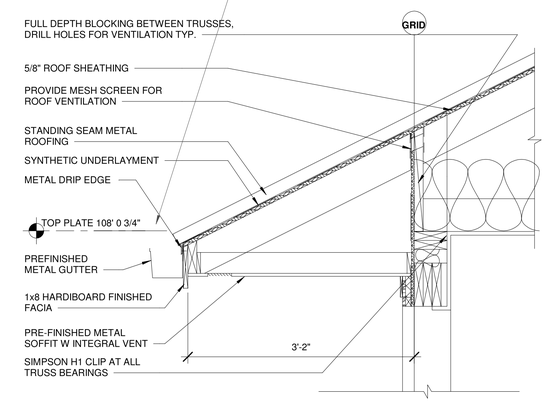

2 EAVE 2
SCALE: 1" = 1'-0"

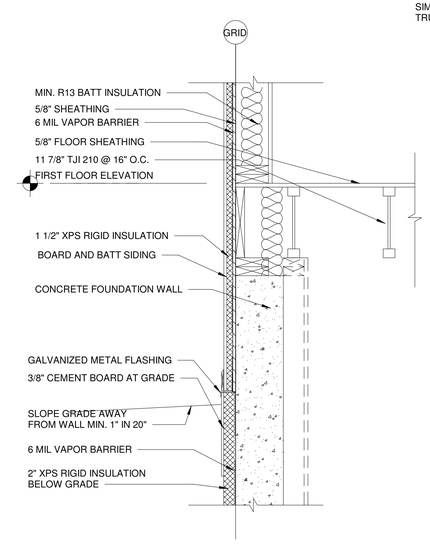

6 RIM 2
SCALE: 1" = 1'-0"

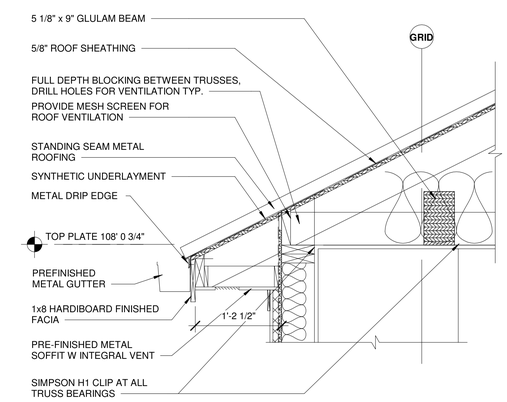

3 EAVE 3
SCALE: 1" = 1'-0"

Spark
ARCHITECTURE
410 Central Ave
GREAT FALLS, MT 59401
T: 406.453.0001
F: 406.760.1788
SPARK-ARCHITECTURE.COM

LICENSED ARCHITECT
SOPHIA A. SPARKLIN
GREAT FALLS, MT
STATE OF MONTANA

FWP BIG SPRINGS RESIDENCE

2013 Fish Hatchery Rd, Lewistown, MT 59457

PHASE	REVISIONS
Re-bid	January 10, 2022

20011

DETAILS

A700

1/10/2022 3:07:28 AM

HARDWARE SCHEDULE

HARDWARE SET #		FUNCTION	HINGES	HANDLES / PULLS	THRESHOLD	DOOR STOPS	GASKETING	NOTES:
1	3	ENTRY	MCKINNEY T2714 (3) PER DOOR	SCHLAGE F60 CAM, ACC SATIN NICKEL	(3) PEMKO 158 ALUM	ROCKWOOD 518 - US26D	PEMKO AM 88	ENTRANCE HANDLES
2	4	PRIVACY	MCKINNEY T2714 (3) PER DOOR	SCHLAGE F40 ACC SATIN NICKEL	-	ROCKWOOD 518 - US26D	-	-
3	3	PASSAGE	MCKINNEY T2714 (3) PER DOOR	SCHLAGE F10 ACC SATIN NICKEL	-	ROCKWOOD 518 - US26D	-	-
4	2	SLIDING	JOHNSON 1060 POCKET DOOR	PRIME-LINE SATIN NICKEL W LOCKING	-	-	-	-
5	6	BI FOLD	JOHNSON 111FD	PRIME-LINE KNOB SATIN NICKEL	-	-	-	-

HARDWARE NOTES:
1) THE ABOVE HARDWARE IS BASIS OF DESIGN
2) REVIEW BI FOLD DOOR SIZES PROVIDE THE CORRECT HARDWARE SETS FOR THE SIZE OF DOOR NOTED ON THE DRAWINGS

DOOR GENERAL NOTES:

1. ALL DIMENSIONS SHALL BE FIELD VERIFIED.
2. SWING INDICATION IS DIAGAMMATIC ONLY, SEE PLAN AND ELEVATION FOR ACTUAL SWING.
3. GLAZING USED IN DOORS, GLAZING WITHIN 18" OF THE FLOOR AND WITHIN A 24" ARC OF A DOOR, AND GLAZING SUBJECT TO HUMAN IMPACT SHALL BE FULLY TEMPERED OR LAMINATED GLASS.
4. ALL ENTRY DOORS TO HAVE U-FACTOR VALUE OF 0.77 OR BETTER.
5. MATCH DOOR HARDWARE TO RATING AND ACCESSIBILITY REQUIREMENTS AS REQUIRED.
6. ENTRY DOORS TO MATCH EXISTING ENTRY DOOR FINISH AND COLOR.
7. INTERIOR DOORS AND FRAMES TO MATCH EXISTING ADJACENT INTERIOR DOORS FINISH AND COLOR, UNLESS NOTED OTHERWISE.
8. AISLES LEADING TO REQUIRED EXITS SHALL HAVE A MINIMUM WIDTH OF 44". A WALKWAY WITH A MINIMUM WIDTH OF 44" SHALL BE MAINTAINED CONTINUOUSLY TO A PUBLIC WAY.
9. EXTERIOR CONCRETE SLABS AT DOOR OPENINGS SHALL HAVE A MAXIMUM SLOPE OF 1/4" PER FOOT.

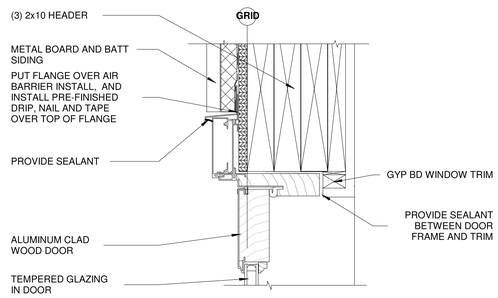

1 EXTERIOR DOOR HEAD
SCALE: 3" = 1'-0"

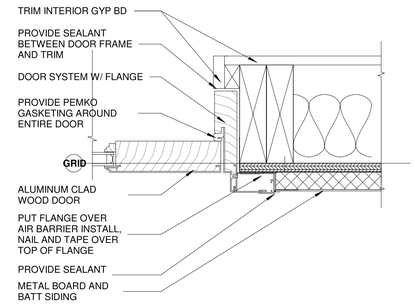

2 EXTERIOR DOOR JAMB
SCALE: 3" = 1'-0"

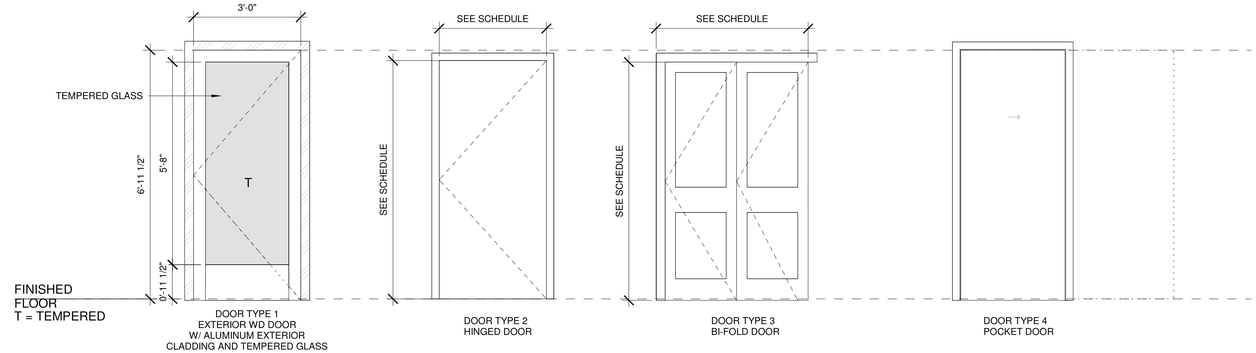

DOOR LEGEND
SCALE: 1/2" = 1'-0"

DOOR SCHEDULE

MARK	ROOM	TYPE	DOOR WIDTH	DOOR HEIGHT	DOOR THICKNESS	DOOR GLAZING	FRAME MATERIAL	Construction Type	DOOR Material	HARDWARE	COMMENTS
101A	DINING + LIVINGROOM	1		7' - 0"	2"	Y	WD/ALUM	SOLID CORE	WD/ALUM	1	EXTERIOR DOOR INTO FIRST FLOOR
103A	HALLWAY1			6' - 8"	1 1/2"			HOLLOW CORE			
104A	HALLWAY1			6' - 8"	1 1/2"			HOLLOW CORE			
105F	BEDROOM 2	3		6' - 8"	1 1/2"	N/A	WD	HOLLOW CORE	WD		BI-FOLD
105H	BEDROOM 1	3		6' - 8"	1 1/2"	N/A	WD	HOLLOW CORE	WD	5	BI-FOLD
105K	MASTER BEDROOM	2		6' - 8"	1 1/2"	N/A	WD	HOLLOW CORE	WD		DOUBLE BI-FOLD
107A	HALLWAY 2			6' - 8"	2"						
107B	HALLWAY 2			6' - 8"	1 1/2"						
108A	BEDROOM 1	2	3' - 0"	6' - 8"	1 1/2"	N/A	WD		WD	2	HINGED
108B	BEDROOM 1	3	4' - 0"	6' - 8"	1 1/2"	N/A	WD	HOLLOW CORE	WD		BI-FOLD
109A	BEDROOM 2	2		6' - 8"	1 1/2"	N/A	WD		WD		HINGED
109B	BEDROOM 2	3		6' - 8"	1 1/2"	N/A	WD	HOLLOW CORE	WD	5	DOUBLE BI-FOLD
110A	MASTER BEDROOM	2		6' - 8"	1 1/2"	N/A	WD		WD	2	HINGED
110B	MASTER BEDROOM	4		6' - 8"	1 1/2"	N/A	WD	HOLLOW CORE	WD	5	BI-FOLD
111A	MASTER BATH	4		6' - 8"	1 3/8"	N/A	WD	HOLLOW CORE	WD	4	POCKET DOOR
112A	BATH	2		6' - 8"	1 1/2"	N/A	WD		WD	2	HINGED

Spark
ARCHITECTURE
410 Central Ave
GREAT FALLS, MT 59401
T: 406.453.0001
F: 406.760.1788
SPARK-ARCHITECTURE.COM

LICENSED ARCHITECT
SOPHIA A. SPARKS
GREAT FALLS, MT
STATE OF MONTANA

FWP BIG SPRINGS RESIDENCE

2013 Fish Hatchery Rd, Lewistown, MT 59457

PHASE	REVISIONS
Re-bid	January 10, 2022

20011

DOOR SCHEDULES

A800

1/10/2022 3:07:29 AM

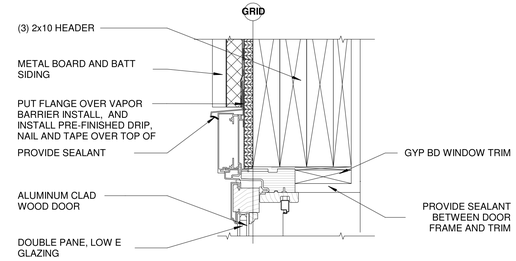

1 WINDOW HEAD
SCALE: 3" = 1'-0"

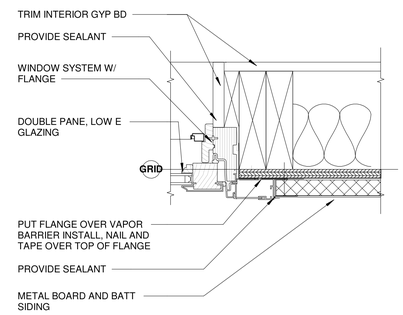

2 WINDOW JAMB
SCALE: 3" = 1'-0"

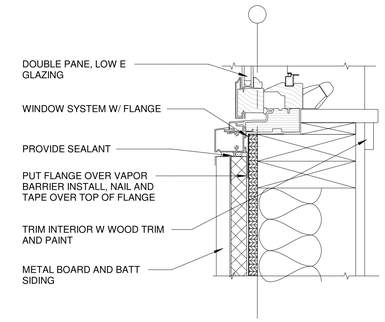

3 WINDOW SILL
SCALE: 3" = 1'-0"

WINDOW GENERAL NOTES:

1. ALL DIMENSIONS SHALL BE FIELD VERIFIED.
2. SWING INDICATION IS DIAGAMMATIC ONLY, SEE PLAN AND ELEVATION FOR ACTUAL SWING.
3. GLAZING USED IN DOORS, GLAZING WITHIN 18" OF THE FLOOR AND WITHIN A 24" ARC OF A DOOR, AND
   GLAZING SUBJECT TO HUMAN IMPACT SHALL BE FULLY TEMPERED OR LAMINATED GLASS.
4. ALL ENTRY DOORS TO HAVE U-FACTOR VALUE OF 0.77 OR BETTER.
5. MATCH DOOR HARDWARE TO RATING AND ACCESSIBILITY REQUIREMENTS AS REQUIRED.
6. ENTRY DOORS TO MATCH EXISTING ENTRY DOOR FINISH AND COLOR.
7. INTERIOR DOORS AND FRAMES TO MATCH EXISTING ADJACENT INTERIOR DOORS FINISH AND COLOR, UNLESS NOTED OTHERWISE.
8. AISLES LEADING TO REQUIRED EXITS SHALL HAVE A MINIMUM WIDTH OF 44". A

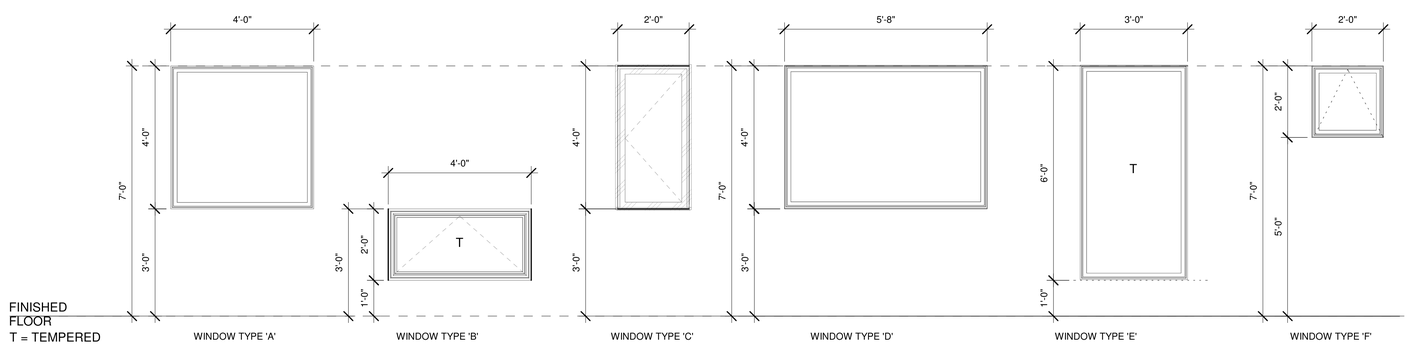

WINDOW LEGEND
SCALE: 1/2" = 1'-0"

NOTE:

1. ALL GLASS WITHIN 18" OF FINISH FLOOR AND 24" FROM DOORS SHALL BE SAFETY GLASS PER IBC SECTION 2406.3.
2. ALL WINDOWS ALUM FRAMES W/ DOUBLE-PANE GLASS
3. BASES OF WINDOW DESIGN ANDERSEN E SRIES WINDOWS, E-SERIES WINDOW PRODUCTS ARE EXTRUDED ALUMINUM CLAD WOOD

WINDOW SCHEDULE

MARK	TYPE	COUNT	WIDTH	HEIGHT	SILL HEIGHT	REMARKS
A	48" x 48"	8	4' - 0"	4' - 0"	3' - 0"	<varies>
B	24" x 48"	4	4' - 0"	2' - 0"	1' - 0"	<varies>
C	24" x 48"	10	2' - 0"	4' - 0"	3' - 0"	CASEMENT WINDOW
D	48" x 72"	1	5' - 8"	4' - 0"	3' - 0"	PICTURE WINDOW
E	72" x 36"	1	3' - 0"	6' - 0"	1' - 0"	PICTURE WINDOW
F	24" x 24"	2	2' - 0"	2' - 0"	5' - 0"	AWNING WINDOW

Spark
ARCHITECTURE
410 Central Ave
GREAT FALLS, MT 59401
T: 406.453.0001
F: 406.760.1788
SPARK-ARCHITECTURE.COM

LICENSED ARCHITECT
SOPHIA A. SPARK
GREAT FALLS, MT
STATE OF MONTANA

FWP BIG SPRINGS RESIDENCE

2013 Fish Hatchery Rd, Lewistown, MT 59457

PHASE	REVISIONS
Re-bid	January 10, 2022

20011

WINDOW SCHEDULE

A801

1/10/2022 3:07:29 AM